PIKES PEAK INTERNATIONAL HILL CLIMB

"RACE TO THE CLOUDS"

2027 RULE BOOK

EFFECTIVE OCTOBER 9, 2026

1631 Mesa Ave., Suite B
Colorado Springs, CO 80906
(719) 685-4400

Race Director: Randy Ruyle, rruyle@ppihc.org
Director of Competition: Dan Skokan, dskokan@ppihc.org

Website: http://www.ppihc.org

The Pikes Peak Auto Hill Climb Educational Museum, Inc., (PPAHCEM)
is incorporated with both Federal and State of Colorado exemptions.
Any references to the race will also be referred to as the
Pikes Peak International Hill Climb (PPIHC).
PPAHCEM is a non-profit 501(c)(3) organization.

© 2026 The Pikes Peak Auto Hill Climb Educational Museum, Inc.

TABLE OF CONTENTS

Section	Page Number
Introduction	3
Mission Statement	3
Section I – Sanction	4
Section II – Competitor Eligibility	4
Section III – Jurisdiction & Administration	5
General Competition Rules	5
• Part I – General	5
• Part II – Organization of Event	6
• Part III – Credentials	7
• Part IV – Race Officials	8
• Part V – Pikes Peak – America's Mountain Highway	10
• Part VI – Practice & Race Day - General	10
• Part VII – Entries	11
• Part VIII – Qualification / Race Day	12
• Part IX – Race Rules & Regulations	14
• Part X – Penalties	17
• Part XI – Protests	19
• Part XII – Appeals	20
• Part XIII – Advertising & Publicity	21
• Part XIV – Appearance	24
• Part XV – Supplemental Information	24
100 – Car Safety & Construction	25
• 200 – Unlimited Division	49
• 300 – Time Attack 1 Division	50
• 400 – Pikes Peak GT4 Division	54
• 500 – Open Wheel Division	72
• 600 – Pikes Peak Open Division	75
• 700 – Exhibition Division	77
1800 – Records Appendix	78
• 1900 – Production Records	78
• 2000 – Electric Modified Record Rules & Regulations	85
• 3000 – Electric Production Record Rules & Regulations	85
• 4000 – Hybrid Modified Record Rules & Regulations	86
• 5000 – Hybrid Production Record Rules & Regulations	88
Definition of Terms	91
Diagrams	94
Conversion Tables	100
Yokohama Course Map	101

The PPAHCEM/PPIHC reserves the right to invite other sanctioning bodies, and vehicles running under that sanctioning body's rules, to the event. PPIHC Safety Rules supersede those of other sanctioning bodies.

There have been additions and changes to the 2027 Rule Book. Additions or changes will appear in red font. Addendums will appear in blue font (non-hyperlinked).

INTRODUCTION

The Pikes Peak International Hill Climb (PPIHC), also known as The Race to the Clouds, is an annual invitational automobile hill climb to the summit of Pikes Peak – America's Mountain in Colorado, USA that is typically held on the last Sunday in June.

Founded in 1916 by Spencer Penrose (also the founder of The Broadmoor Hotel, Pikes Peak Highway and El Pomar Foundation), the PPIHC takes place on a 12.42 mile (19.99 km.) public toll-road boasting 156 turns, while competitors climb 4,720 ft. (1,440 m.) from the 9,390 ft. (2,862 m.) Start Line at Mile 7 marker on the Pikes Peak Highway to the 14,115 ft. (4,300 m.) Finish Line at the mountain's summit. As the competitors climb toward the summit, the thin air slows reflexes and saps competitor's mental and muscle strength in addition to robbing internal combustion engines of up to 30% of the power they are capable of at the Start Line. Competitors and vehicles must be in top shape and condition simply to finish, let alone win.

The race is self-sanctioned and is the most diverse one day motorsports event in the world featuring state-of-the-art prototype vehicles, factory-backed entries and modified production automobiles.

The highway is leased by the PPAHCEM from Pikes Peak – America's Mountain (entity of the City of Colorado Springs) and operates under a special-use permit from Pike National Forest and the City of Colorado Springs.

MISSION STATEMENT

The PPAHCEM is a non-profit 501(c)(3) organization and serves to promote and develop educational awareness of advancements in motor sports technology and automotive engineering while maintaining and preserving the history of the PPIHC.

The PPAHCEM exists to demonstrate the advancements in the practical application of motorsports technology while continuing to be a premier, international racing event.

SECTION I – Sanction

The Pikes Peak International Hill Climb is self-sanctioned by the Pikes Peak Auto Hill Climb Educational Museum, Inc.

SECTION II – Competitor Eligibility

Eligibility for invitation shall be determined by the PPAHCEM based on such factors as the officials determine are indicative of the applicant's ability to perform satisfactorily in the event and at all race-related activities including personal conduct, and contact with the media.

A. Request for Invitation must be completed online in full and submitted to the sanctioning body between December 10th, 2026, and February 4th, 2027, by 5:00pm MST.

B. All participants must have a current and valid driver's license.

C. It is recommended that each approved competitor carry an active health insurance policy. International participants; verify with your health insurance company that your coverage extends to injuries resulting from participation in a racing event overseas as many policies specifically exclude coverage for racing injuries and/or injuries occurring overseas (outside of the coverage territory).

D. Each competitor shall submit a current Medical History Form prior to June 1, 2027, as well as undergo a Competitor Health Screening at Competitor Registration.

E. Each participant shall execute the Terms of Acceptance as requested by PPAHCEM. If the participant is under the age of 18 years at the time of signing, the participant's parent or legal guardian must also sign and execute the Terms of Acceptance.

F. The Director of Competition shall have the right to require competitors to demonstrate their ability to drive competitively before they shall be permitted to practice or qualify.

G. Any competitor who, in the opinion of the Stewards/Officials, shows insufficient skills, judgment, or ability may be disqualified from further participation in the event.

H. Competing in more than one division is prohibited.

I. All participants are required to carry mandatory event decals on their entries in locations specified by the PPAHCEM. Refer to SECTION III – Jurisdiction & Administration, PART XIII – Advertising & Publicity 13.3 for more information.

SECTION III – Jurisdiction & Administration

The Pikes Peak Auto Hill Climb Educational Museum, Inc. organizes, promotes, sanctions and conducts annually, at such time as deemed advisable by the PPAHCEM, a motor vehicle Hill Climb on Pikes Peak located in El Paso and Teller Counties in the State of Colorado.

Participation in the Pikes Peak International Hill Climb is by invitation only.

GENERAL COMPETITION RULES

PREFACE

The rules are applicable to all events run under the auspices of the Pikes Peak International Hill Climb (PPIHC). Each participant is deemed to have full awareness and understanding of these rules.

All competitors and participants are bound by the PPIHC General Competition Rules.

No competitor or his/her authorized agent shall circumvent the intent of these rules.

The PPAHCEM reserves the right to amend these rules by addendum. Each vehicle entered in the PPIHC shall be required to pass a safety and technical inspection at a location and time designated by the Director of Competition. All safety/technical inspections will be conducted under the direction of the PPIHC. The inspectors shall conduct the inspection in accordance with the standards prescribed by the Director of Competition. Items to be inspected are specified in these regulations, and any subsequent Bulletins. Vehicles may be subject to inspection by the Director of Competition at any time during the event. Vehicles found to be unsafe or not race-ready will be suspended from further competition until defects are corrected. The Director of Competition may exclude any entry determined to be unsafe or in noncompliance with the technical rules and regulations as specified in this Rule Book, or subsequent Bulletins.

PART I – General

1.1 – These rules are effective October 9, 2026.

1.2 Revisions of Rules – The PPAHCEM reserves the right to amend these rules or any addendum or supplement.

1.3 Application of These Rules – These rules shall apply to every event and to all certified tests or trials conducted on Pikes Peak.

1.4 PPAHCEM Option – The PPAHCEM/PPIHC has the right to make and construe rules and to render decisions concerning them; to grant, refuse or withdraw licenses, sanctions and approvals; to assign and cancel dates for competitions; to appoint and rescind the appointment

of officials; to impose and remove penalties for violation of its rules; to establish standards of eligibility for participation in competition; to establish rules for its own procedures; and to do any and all things which, in its judgment, are consistent with the enhancement of the Pikes Peak International Hill Climb.

1.5 Special Rulings – The PPAHCEM reserves the right to make special rulings and interpretations that it deems appropriate to the well-being of the event. Participation in the event shall constitute recognition of this right.

1.6 Acceptance of Rules – Every person who participates in the event shall be deemed to be acquainted with the rules and shall agree to the acceptance of these rules as published, amended or supplemented, and shall agree to be bound by same. Visit 2027 Bulletin Book, for 2027 Bulletins.

1.7 Injury Reports – Any credentialed individual injured during the event must promptly report to medical personnel before leaving the mountain.

1.8 Fire Prevention – Extreme care should be taken in the handling of fuels. Where local requirements are posted, they become a part of these rules. Flip-type fittings are not permitted on any tank or container carrying liquids in or on the vehicle. Under no circumstances shall fuel be allowed in the pit area during the event, except in approved and authorized refueling containers or tanks.

1.9 Accident Waiver and Release of Liability – All competitors will be required to sign any appropriate releases and/or documents as required by the PPAHCEM insurer.

PART II – Organization of Event

2.1 Alternate Dates – Situations outside of our control may dictate changes to the Race Week schedule. Any changes will be made at the discretion of the PPAHCEM.

2.2 Duties and Responsibilities – PPAHCEM shall be solely responsible for the organization of the event, securing of entries, all notices and materials required, insurance, safety precautions and vehicles, participant safety, course conditions, crowd control, ambulances, fire protection, and medical support.

2.3 Announcement of Officials – All officials shall be designated by and under the control of PPAHCEM.

2.4 Entry – A legitimate entry consists of a paid entry, an approved driver and a competition vehicle, which passes a Technical Inspection. It must take a green flag in practice.

2.5 Abandonment or Postponement – In the event of abandonment or postponement, entry fees shall not be returned under any circumstances.

2.6 Certified Trials and Tests – Any person who desires to test any product under PPAHCEM supervision and observation may submit an application to the PPAHCEM for a sanctioning. Such trials must conform to regulations set forth in these rules.

2.7 Mandatory Meetings – During the course of the event there are mandatory sessions to include: Technical Inspection, competitor's meetings, rookie orientation, etc. Failure to attend or arrive at scheduled time will result in fines (not to exceed $5,000.00 USD), loss of practice time and/or exclusion from the event. During the course of the event, PPAHCEM has the authority to add additional meetings.

2.8 Timing – The PPIHC will determine in advance what timing system or combination of same will be used for practice and race day situations. If a transponder system is utilized, participants may be required to purchase or rent (with deposit) a transponder. If a transponder is lost, damaged, or not returned, the entry will be required to pay for the transponder within 30 days of notification. The price to replace a transponder is $300.00 USD.

2.9 Trailer Size and Support Vehicles – The PPIHC reserves the right to limit the size of transporters, trailers, and competitor pit space and/or support vehicles. Competitors may need to submit their total trailer length (to include tow vehicle) at Technical Inspection for approval by the Director of Competition or his designee.

2.10 Towing – All reasonable towing on Pikes Peak (from the Start Line to the summit) during Race Week and on Race Day will be provided by PPIHC. Competitors may directly incur any additional recovery costs that are necessary for vehicles that are too far off the race course and/or cannot be recovered within two hours of practice or race completion. Competitors are also responsible for towing damaged race vehicles from the Start Line down the mountain.

2.11 Course Damage – All reasonable course damage caused by a competitor during PPIHC sanctioned events (Race Week/Race Day) will be covered by the PPIHC. Competitors may directly incur any extra cost for damage to guardrails, fence, other equipment and/or structures on Pikes Peak – America's Mountain.

2.12 On Course Incidents – The PPIHC reserves the right to impound any and all videos from any and all vehicles equipped with onboard video devices that are involved in an on course incident.

PART III – Credentials

3.1 Credentials – Credentials must be secured annually from the PPAHCEM before participants may enter in competition. Credentials shall expire upon termination by the PPAHCEM, for a good cause, or on a predetermined date.

3.2 Application for Credentials – Application shall be made on an approved form and filed with the PPIHC Registrar.

3.3 Fees

> 3.3.1 – Each registered driver will receive one competitor credential. Drivers receive five (5) additional crew credentials at no additional charge; additional crew credentials may be purchased at $125 each.

3.3.2 – A fee of $100.00 will be charged to replace lost or stolen credentials.

3.3.3 – No fee or part thereof shall be returned to a competitor due to their ceasing to participate in sanctioned competition regardless of the reason.

3.4 Validity – A credential issued by the PPAHCEM is valid in competitions/events only with respect to the category indicated on the participant's credential.

3.4.1 – Competitor and Crew credentials will not give access to Pikes Peak – America's Mountain during normal business hours during Race Week. The credentials will allow competitors and crew members though the Gateway for Practice Days, Saturday Set-Up, and on Race Day only.

3.5 Credentialed Participants – The holder of a credential shall produce it for inspection upon demand by any PPIHC official.

3.5.1 – Credentials must be shown at the Gateway, or the person(s) must pay the ticket/admission price (pending availability).

3.5.2 – Credentialed participants MUST have their credential on their person in order to participate (drivers, crew, etc.).

3.6– Competitor Credentials may only be obtained at Registration during posted hours on the Official Race Week Schedule. Each credentialed participant must sign the necessary waiver(s) before any credentials are issued.

PART IV – Race Officials

4.1 Race Director – The Race Director will be the chief representative of the PPAHCEM at all events and will be appointed by the Board of Directors.

4.1.1 – The Race Director shall exclude/replace any official who in his/her opinion fails to perform his/her duties satisfactorily.

4.1.2 – The Race Director shall decide as to the position of the start, finish, or other lines.

4.1.3 – The Race Director may, either before or during an event, penalize or exclude any competitor or participant whom he/she determines guilty of misbehavior or misconduct.

4.1.4 – The Race Director, with consultation from Board representatives (if available) has the right to stop or delay the event whenever in his/her opinion the conduct of a safe event is in jeopardy.

4.1.5 – The Race Director, with consultation from Board representatives, shall have the right to terminate the race before its scheduled finish if an emergency demands such action, and in such case shall determine the disposition of awards.

4.1.6 – The Race Director will ensure proper discipline in the event and may impose a fine of up to five thousand dollars ($5,000.00) for violation of the rules.

4.2 Director of Competition Shall:

4.2.1 – Be responsible for placing the competing vehicles in their respective positions for presentation to the starting flagman for the race event in accordance with the rules for such as outlined within this manual.

4.2.2 – Advise the Stewards regarding any vehicle that in his/her opinion is discharging fluid and/or is in any way creating a hazard to him/herself, to other participants, or to the public.

4.2.3 – Examine vehicles involved in accidents and determine if they are suitable for further participation.

4.2.4 – Take possession of such vehicles and transport to an official area where they shall be kept under supervision and examined for compliance with rules.

4.2.5 – Receive all protests and, after consideration and input from all parties / officials involved, affirm or deny the protest.

4.2.6 – Approve entries whose safety modifications meet or exceed those standards listed in Section 100 – CAR SAFETY AND CONSTRUCTION. Applicants not receiving approval may utilize the appeals process as defined in Part XII.

4.3 Section Steward’s Duties and Powers

4.3.1 – Any Section Steward may require any competitor to demonstrate his or her ability to properly operate the vehicle in which he or she intends to compete.

4.3.2 – Any Section Steward may retrieve a credential from anyone, suspend further participation and/or direct the party to leave the event, including all of its supporting activities.

4.3.3 – Any Section Steward may exclude any vehicle from continuing the event if he/she considers it to be a potential source of danger.

4.3.4 – Any Section Steward may impose fines/disciplinary action as deemed necessary for violation of stated rules.

PART V – Pikes Peak – America's Mountain Highway Traffic

5.1 – The cardinal safety rule is that all traffic moves uphill only when on the race course.

5.2 – The only time traffic moves downhill on the race course is when an official vehicle escorts it or when the vehicles are released.

5.3 – During practice and qualifying, it is common to have two-way traffic on the return trip to the Start Line or pits. All competitors must drive slowly, in the right lane and within the posted speed limit without passing ANY moving vehicles.

5.4 – Participants who "drive" the highway for familiarization during regular Pikes Peak – America's Mountain business hours MUST obey all the Pikes Peak Highway rules and regulations for normal traffic. Any complaints received by the PPIHC may result in a fine and possible disqualification from the PPIHC.

5.5 – Competitors are prohibited from driving (in a race vehicle and/or personally owned vehicle) on the race course prior to the start of the event on Race Day. Anyone caught on the course is subject to disciplinary action which could include fine and/or exclusion from the event.

PART VI – Practice & Race Day – General

All functions of the event are under the control, supervision and discretion of the Race Director and/or the Director of Competition.

6.1 – Practice sessions will be held on separate sections of the highway. Entries are assigned to specified practice areas. Practice is not permitted except during assigned hours.

6.2 – All entries must practice with their division. No race vehicle may travel outside its assigned practice area without authorization from the Director of Competition and/or Race Director. Practice Day groups cannot be altered to accommodate teams and/or individuals.

6.3 – All race vehicles must be below the Gateway one hour after practice concludes.

6.4 – Passengers are not permitted within a moving race vehicle at any time the vehicle is above the Gateway. No co-drivers are permitted in any division.

6.5 – Any competitor showing disregard for the safety of other competitors, officials, or spectators by reckless driving or speeding downhill may be fined, required to trailer the vehicle, have a substitute driver return the vehicle to a designated starting area, and/or be disqualified without refund of entry fee.

6.6 – There will be no unloading or loading of race vehicles on the highway anywhere below Crystal Reservoir, with the exception of approved designated areas at the Gas Pumps/Garage Area.

6.7 – It is mandatory for the driver to wear his or her helmet, head and neck restraint, fire suit, shoes, eye protection, gloves, seat belts, shoulder harnesses and window netting/arm restraints

(in vehicles required to have) while operating the race vehicle. Window nets may be down and gloves removed following completion of the race on Race Day only during the Parade of Champions procession down to the pits.

6.8 – Each competitor will be permitted to present one (1) vehicle for Technical Inspection. No additional vehicles may be utilized for practice, qualifying or race day without permission from the Director of Competition or his designee.

6.9 – Rookie competitors must practice every section of the race course. A Rookie's failure to practice one or multiple sections of the race course will result in their disqualification from the event.

6.10 Pit Space

> 6.10.1 – The allotted Pit Space for competitors (Practice Days and Race Day) will be established by the PPIHC. Competitors will be restricted to their allotted space only. Use of any space outside of their assigned pit space is not allowed.

6.11 Vehicle Damage and Oil Leaks – Any competitor who develops an oil leak or vehicle damage and does not remove their vehicle from the course as soon as possible, or continues to drive their vehicle, may incur a penalty and/or be fined. This matter will be treated seriously. Any consumables used to clean up the course may be charged to the competitor and/or the competitor may be excluded from the event.

If a fire extinguisher is used to extinguish a fire in or around a vehicle on or off the course, the cost of recharging the extinguisher may be charged to the competitor

PART VII – Entries

7.1 Vehicle Entry

> 7.1.1 – Once the entry period closes and an entry is accepted for participation in a specific division, the vehicle cannot change divisions without approval from the Race Director, Director of Competition, and/or Race Committee. All entry fees are non-refundable and non-transferrable.
>
> Once the entry period closes and an entry is accepted for participation with a specific vehicle and driver, the vehicle and/or driver cannot change without approval from the Race Director, Director of Competition, and/or Selection Committee. Additionally, the Selection Committee may re-evaluate the entire application to determine if the entry is invited, waitlisted, or declined.
>
> 7.1.2 – The Director of Competition may grant permission for a driver to be named after the closing date.
>
> 7.1.3 – All vehicle designs must receive final approval from the Race Director and the Director of Competition. An invitation to enter the race does not guarantee vehicle approval.

7.1.4 – All vehicle entries must be operated/driven by a human being within the vehicle. Autonomous and/or remote-controlled vehicles are prohibited.

7.2 Filing Entries – PPIHC will invite and receive entries only from selected competitors. PPIHC can set the number of entries in the field.

7.3 Entry Fee – Entry fees will be specified in the entry form. Entry fees are non-refundable.

7.4 Closing of Entries – The entry closing date shall be stated on the entry form. Entry fees must be received by the PPAHCEM by close of business on the closing day.

7.5 Refusal of Entry – The PPAHCEM reserves the right to prevent any person from participating in the PPIHC. The PPAHCEM shall have the authority to accept or reject any entry. If an entry is refused, written notification of such refusal shall be sent to the entrant (see Section III - Jurisdiction and Administration).

7.6 Divisions

Division – The foundation of the competition structure, wherein various entries and vehicle types are separated by established rules and specifications.

7.6.1 –

Divisions	Classes
Unlimited	Production Based
	Super Unlimited
Time Attack 1	
Pikes Peak GT4	Turbo
	Normally Aspirated (NA)
Open Wheel	
Pikes Peak Open	
Exhibition	

7.6.2 – PPIHC has the right to add a Division and/or Class to the field with approval from the Competition Committee and Board of Directors.

PART VIII – Qualification / Race Day

8.1 Method of Qualification – PPIHC shall state the methods of qualifying prior to the scheduled completion of the Technical Inspection of race vehicles.

8.2 The Qualification Attempt

8.2.1 – A competitor who has qualified a vehicle may not make an attempt to qualify a second vehicle. No Division change request will be accepted after a qualifying attempt has been made.

8.2.2 – A qualification attempt shall be considered started when the front of the vehicle crosses the starting line under its own power after the proper signal has been given by the starter.

8.2.3 – A competitor stopping his/her vehicle anywhere on the course after starting a qualifying attempt shall be charged with an attempt.

8.2.4 – Any race vehicle that does not make a qualification attempt may be added to the race program under the Race Director's option, subject to the approval of the Director of Competition and Board of Directors, and payment of all applicable fees.

8.2.5 – The number of qualifiers shall be established by the PPIHC Board of Directors, Staff, Race Director, and Director of Competition. The Director of Competition may disqualify a vehicle completing a qualifying run for any reason, including if it is measurably slower than other entries in the division. “Measurably slower” is any vehicle that is outside of 130% of the fastest qualifier within each division.

8.2.6 – The PPIHC shall be allowed to add to the field at its discretion. The Race Director and/or Director of Competition reserves the right to adjust the Run Order.

8.2.7 – If all competitors in a single qualifying run do not have an opportunity to record a time, all times for that run will be disregarded.

8.3 Race Day Re-Runs

8.3.1 – In the event a red flag is displayed to a competitor during the race, they will be brought back to the Start Line.

8.3.2 – Competitors will be given twenty minutes (under PPIHC supervision) to replace like fluids, tires, and plugs (on internal combustion engines). Electric vehicles may recharge. No other work may be completed on the car.

8.3.3 – The twenty (20) minute clock will start when the car passes the green flag station at the Start Line.

8.3.4 – The Race Day program will continue as posted once the red flagged race vehicle(s) have returned to the Start Line and the course is clear.

8.3.5 – When twenty (20) minutes have expired, the vehicle(s) must be ready to be placed back in line for his/her re-run.

8.3.6 – If the competitor is unable to re-present within the twenty (20) minute window, he/she may inform the Director of Competition and request a time extension. If the extension is approved, the competitor will be given a new re-grid time limit. Then, when ready to present, the competitor may be given the next available slot in the run order or be asked to grid at the end of the program, to be determined by the Director of Competition.

PART IX – Race Rules & Regulations

9.1 Method of Starting – All races, practices and qualification trials shall begin with a rolling start.

9.2 – Order of Start will be specified by the PPIHC prior to the event and shall be enforced by the Director of Competition.

9.2.1 – Any competitor failing to present at the Start Line in the specified run order may be disqualified.

9.3 Qualifiers – See Part VIII - Qualification / Race Day.

9.4 Signaling to Competitors – The Officials shall employ the following flag signals.

Green Flag/Starting Device.....Start
Checker and Red.....Practice/Qualifying/Race Day Race Finish
Red Flag.....Stop immediately; race is halted

9.4.1 – The Start: The start will be official only upon the starter signaling with the green flag and/or with a starting device (ex. Starting Clock). Once the official has signaled the competitor to start, the competitor must leave the Starting Line within one (1) minute.

9.5 Moment of Starting/Timing – The timing of a race shall begin at the moment when the vehicle crosses the Start Line after the starter has given the proper signal.

9.6 Race Completion

9.6.1 – A competitor's competitive run will be complete when the vehicle crosses the Finish Line.

9.6.2 – The checkered flag will be displayed to each vehicle as it completes its run.

9.6.3 – Finish positions will be determined by the elapsed time in which the vehicles complete the race course. Vehicles not finishing will not be eligible for any awards.

9.6.4 – If the race is abandoned for any reason, the finishing positions will be determined according to the last officially scored times prior to such abandonment. Finish positions will be determined by the PPIHC.

9.6.5 – In the event the course is shortened and multiple Finish Lines exist, competitors given the opportunity to race to the highest finishing point will be granted finishing position priority over those who run to lower points.

9.6.6 – Any competitor failing to reach the determined finishing point, when they took the green flag, will be ruled as a DNF.

9.6.7 – All times and results will not be made official until deemed official by the Race Director and Director of Competition.

9.7 Incidents

9.7.1 – Vehicles involved in incidents: Any vehicle that overturns or crashes during practice, qualifications or during the race may be excluded from participation in the remainder of the event. New inspection (from a PPIHC Race Official) is required prior to participation in subsequent scheduled practices, qualification or the race.

9.7.2 – Cars that have left the track may not resume racing under any circumstances. Any vehicle continuing may be disqualified. A car will be deemed to have left the track when all four (4) wheels leave the track, and/or said vehicle is unable to continue.

9.7.3 – Any competitor who causes two red flags during a practice session may be excluded from the remainder of the session.

9.7.4 – Any competitor who causes a red flag during their Race Day run will be marked in the official results as a DNF.

9.8 Persons Allowed on the Course – During competition, only the Stewards, starter, Director of Competition, first responders, other personnel as authorized by the Race Director / Safety Director, and any personnel required for service or emergencies shall be permitted on the race course, and then only to perform official duties. Any participant violating this rule may be immediately removed from the course by law enforcement and may be penalized.

9.9 Pushing – Pushing or towing of a race vehicle is not permitted during any competition when the vehicle is on the race course between the Starting Line and Finish Line.

9.10 Substitute Competitors – Due to extenuating circumstances, a substitute driver may be approved by the Race Director and/or Director of Competition after Technical Inspection. Substitute drivers must pay a driver change fee and may be required to start at the end of the field regardless of the qualifying position of the vehicle.

9.11 Race Crew – A vehicle's crew shall consist of a competitor and at least one credentialed chief mechanic/crew chief or assistant chief mechanic, who must be available any time the vehicle is running on the course.

9.12 Credentials – During the conduct of practice and the race, the Race Director, CEO and/or Director of Competition has the authority over and control of all personnel authorized to be on the track, in the pits, and restricted areas, and may require the immediate removal from these areas of personnel who are not directly involved in the conduct of the race, regardless of possession of issued credentials. PPIHC event credentials are non-transferable.

9.13 Alcoholic Beverages/Drugs

9.13.1 – Use of alcohol or controlled substances by any competitor/crew while participating in the PPIHC may cause that competitor/crew to be disqualified from further competition or event participation.

9.14 General Rules

9.14.1 – The entry owner or authorized agent can be held responsible for the behavior of all members of his/her crew during any PPAHCEM sanctioned event. Entry owners or

authorized agents acknowledge they have read, understand, and agree to adhere to the rules and regulations published in this Rule Book.

9.14.2 – Improper Language or Conduct: Any competitor, vehicle entrant, attendant, or any other participant, who, at any time or in any place, shall use improper language to the Stewards, the Director of Competition, or any other official or any officers or members of the PPAHCEM, or be guilty of any improper conduct toward such officers or persons serving under their orders, such improper language or conduct having reference to acts and things connected with the administration of the course or any competition thereon, may be assessed a fine, or be excluded, and may be further penalized as provided herein. This includes quotes, comments and published releases to the public and media. It is expected that all participants shall not express their complaints to the media prior to discussing with the PPAHCEM. Public comment should be professional, non-inflammatory and limited to their performance in the event. Any derogatory public conduct, including on social media platforms, at any time may result in a fine or exclusion from further participation in the event.

9.14.3 – Assault: If any participant or other person during, or in respect to, a race shall commit an assault, or an assault and battery, such person so offending may at once be excluded from that competition by the Director of Competition and reported to the PPAHCEM Board of Directors.

9.15 Testing

9.15.1 – Testing on Pikes Peak – America's Mountain must be conducted through the PPIHC and Pikes Peak – America's Mountain. Competitors should understand that the possibility exists that there may be a section of the course they cannot access. The times of testing will be stated in the testing information agreement.

9.15.2 – Unsanctioned closed-course testing on Pikes Peak – America's Mountain thirteen (13) days prior to Race Day is prohibited.

9.16 Awards – The PPAHCEM Board of Directors reserves the right to establish divisions/classes that receive a purse, trophies, or no awards at all.

9.16.1 – Purse: Amount and formula will be determined by the PPAHCEM Board of Directors.

9.16.2 – Purse, Award and Record Eligibilities by Division.

Divisions	Classes	Record Eligibility				Purse Eligibility	Award Eligibility
		Overall	Division	Class	Previous Class Record (if outlined in Rule Book)		
Unlimited	Production Based	Yes	N/A	Yes	N/A	Yes	Yes
	Super Unlimited	Yes	N/A	Yes	Unlimited	Yes	Yes
Time Attack 1		Yes	Yes	N/A	N/A	Yes	Yes
Pikes Peak GT4 Trophy	Turbo	Yes	N/A	Yes	N/A	Yes	Yes
	Normally Aspirated (NA)	Yes	N/A	Yes	N/A	Yes	Yes
Open Wheel		Yes	Yes	N/A	N/A	Yes	Yes
Pikes Peak Open		Yes	Yes	N/A	N/A	Yes	Yes
Exhibition		Yes	Yes	N/A	*Eligibile Non-Division Records	No	No

***Previous Records** - Competitors must declare a record attempt prior to Technical Inspection and meet all competition rules for eligible former divisions as stated in the Appendix of the 2027 PPIHC Rule Book.

9.17 Numbers

9.17.1 – Assigned Numbers: The PPIHC may recognize past race numbers for veteran competitors.

9.17.2 – There will be no duplicate numbers. Numbers are assigned on a first come, first serve basis.

PART X – Penalties

10.1 Penalties – Any person or organization violating these rules may be penalized.

10.2 Scale of Penalties – Penalties may be any one or more of the following:

- Fines
- Exclusion
- Bonds
- Suspension
- Disqualification

10.3 Fines – All fines shall be the property of the PPAHCEM. No fine assessed shall be removed or modified except by the Board of Directors of the PPAHCEM.

10.4 Authority to Impose Fines – The Race Director, Director of Competition and CEO shall have the authority to impose a fine of up to five thousand dollars ($5,000.00) upon any participant who violates the PPIHC Rule Book, policies, or any PPIHC Bulletins.

10.4.1 – 2027 Fine & Fee Schedule

- $500 minimum may be assessed for missing the mandatory Drivers Meeting
- $500 minimum and/or disqualification may be assessed for missing Rookie Orientation

- $1,000 for PPIHC-approved driver change on or before May 14, 2027; $1,500 after May 14, 2027
- $1,000 for PPIHC-approved vehicle change on or before May 14, 2027; $1,500 after May 14, 2027
- $1,000 for PPIHC-approved division change on or before May 14, 2027; $1,500 after May 14, 2027
- $300 for lost transponder
- $100 for lost credential
- $500 PPIHC-approved race number change fee after April 2, 2027
- $500 fine for any PPIHC event credentials that are used by/given to anyone beyond the original assignee (original event waiver signer). PPIHC event credentials are non-transferable.
- $500 fine for altering any PPIHC logo/event sponsor decals per section 13.3 in the 2027 Rule Book

10.5 Delay in Payment of Fines – Fines are payable immediately. Any delay in payment shall include suspension during the period the fine is unpaid.

10.6 Authority to Pronounce Exclusion – An instance of exclusion may be pronounced by the Director of Competition.

10.7 Exclusion from Course and Grounds – The person excluded shall be prohibited from remaining on or about that portion of the course from which the person is excluded. Persons under an exclusion penalty will not be issued credentials of any kind.

10.8 Bond – A participant may be required by the Director of Competition to post a bond to assure compliance with the regulations or payment of a fine.

10.9 Authority to Pronounce Suspension – Suspension may be pronounced only by the Director of Competition and/or Race Director.

10.10 Effect of Suspension – Suspension, as long as it remains in force, shall mean the loss of any right to take part in any capacity whatsoever in any PPAHCEM sanctioned competition.

10.11 Surrender of Credentials – Every suspended person shall surrender his or her credential to the Director of Competition who shall not return it until the term of suspension has expired. Any delay in handing over a credential shall be added to the term of suspension.

10.12 Authority to Pronounce Disqualification – Disqualification may be pronounced by the Race Director and/or Director of Competition.

10.13 Effect of Disqualification – Disqualification shall include the loss of any right to take part in further competition.

10.14 Loss of Award – Any competitor who has been disqualified shall forfeit all awards and purse money in that competition.

10.15 Publication of Penalty – The PPAHCEM shall have the right to publish, or cause to be published, a notice stating that it has penalized any person, organization, automobile or make of

automobile. The person or organization referred to in such notice shall have no right of action against the PPAHCEM or against any person publishing said notice.

10.16 Modification of Penalty – PPAHCEM shall have the sole right to modify any penalty imposed under these rules.

PART XI – Protests

11.1 Right to Protest – The right to protest lies only with a competitor.

11.2 Lodging of Protest and Protest Fees – Protests shall be in writing accompanied by the protest fee and shall state clearly the subject or action protested and the reason(s) for such protest. The protest fee shall be returned if the protest is upheld. The Director of Competition will determine if the protest is well-founded.

Protest Fee.....$1,000.00 (U.S. Dollars)

11.3 Time Limit for Protests

11.3.1 – To Whom Protests Shall Be Addressed - Protests arising out of a competition shall be addressed and delivered to the Director of Competition or his/her designee, within thirty (30) minutes after the results of each Division have been posted by Timing & Scoring.

11.3.2 – A protest concerning the validity of a race vehicle, shall be lodged within two hours after the conclusion of the Technical Inspection event.

11.3.3 – The resultant decision on a protest shall be delivered within thirty (30) minutes after such decision is made.

11.4 – A violation of safety rules is not subject to protest, but subject to fine.

11.5 Adjudication of Protests – All protests shall be decided upon by the Director of Competition.

11.6 Hearing – Only persons involved in the protest itself shall be given a reasonable opportunity to be heard. The hearing shall be limited solely to the reason(s) stated in the protest.

11.7 – All awards and purse money shall be withheld until the protest has been decided.

11.8 Judgment – All parties concerned shall be bound by the decision given, subject only to appeal as hereafter provided.

11.9 Waiver of Right to Protest – Any contestant who voluntarily competes in any competition, which is not in accordance with the rules as published, thereby waives his/her right of protest against the non-enforcement of such rules.

PART XII – Appeals

12.1 Appeal – The person who files, and the person against whom a protest was filed, may request that the decision of the Director of Competition or his/her designee be reviewed. This request shall be made in writing, specifying the grounds for the appeal, to the Chair of the PPAHCEM Board of Directors within two (2) hours after the announcement of the decision by the Director of Competition and shall be accompanied by a fee of $1,000.00 (U.S. Dollars). The Chair shall decide whether the request shall be granted. There shall be no stay of enforcement of the decision of the Director of Competition pending disposition of the appeal.

> 12.1.1 – If the appeal is upheld, the fee will be refunded in full to the person filing the appeal; if not, the fee will be retained by PPIHC.
>
> 12.1.2 – If the appeal overturns the initial decision of the protest by the Director of Competition the initial fee is handled exactly the same as the appeals fee.

12.2 Procedure – If the Chair grants the request, he/she shall refer the appeal to the Appeals Committee. The Appeals Committee shall commence the hearing on the appeal as soon as reasonably possible, but no later than ten (10) days after receipt of the appeal. The Appeals Committee shall hear only those grounds raised in the initial protest, the report of the Director of Competition, and such other witnesses and evidence that they deem appropriate.

12.3 Decision of the Appeals Committee – The Appeals Committee may affirm, reverse, or modify the decision of the Director of Competition. All costs incurred in connection with the appeal shall be borne by the person against whom the final decision is rendered. The fee for the appeal shall be the property of the PPAHCEM and not refunded under any circumstances.

12.4 Powers of the Appeals Committee – The Appeals Committee shall have the following duties and authority:

> 12.4.1 – To affirm, reverse or modify the decision or penalty being appealed, except that the Appeals Committee may not order a completed racing competition or any portion thereof to be re-run.
>
> 12.4.2 – To regulate the course of the hearing, make evidentiary rulings, examine witnesses and dispose of motions and procedural requests.
>
> 12.4.3 – To order the appellant against whom a final decision is rendered to pay all costs and expenses incurred by PPAHCEM, including a reasonable attorney fee and assessment of costs as the Appeals Committee may deem reasonable under the circumstances.

12.5 Hearing of Appeals – All interested parties shall be given adequate notice of the time and place of the hearing of any appeal, and they shall be entitled to call such witnesses as they may desire and may be represented by an attorney. The hearing shall be confined to protest-able errors raised in the original protest, where applicable, which are also raised in the written appeal, and which have been submitted to the Appeals Committee by the Chairman.

12.5.1 – The decision of the Appeals Committee is final, and no further appeal action is allowed.

12.6 Publication – The PPAHCEM reserves the right to publish any appeals decision, and no person or organization referred to in that publication shall have any right of action against the PPAHCEM or the PPIHC or against any other person in any way connected with or related to any such publication.

12.7 Appeals to a Civil Court – No person aggrieved by any penalty assessed under these rules or any other decision shall have standing to institute a cause of action in any civil court.

PART XIII – Advertising & Publicity

13.1 Advertising on Vehicles

13.1.1 – Advertising, including the vehicle name and/or a product name, as well as any other decals carried on a vehicle in competition are subject to review by the PPAHCEM.

13.1.2 – Advertising of competition results shall be in accord with the facts as determined and announced by the PPAHCEM.

13.2 Name and Title Sponsor – The PPIHC logo, including the Name and Title Sponsor(s) of the event, must be included on all race vehicles. Violation will result in suspension from the event. The PPIHC logo or marks, including the Name and Title Sponsor(s), may not be altered or omitted. This requirement will remain in effect as long as the vehicle and/or competitor advertises their success on Pikes Peak.

13.3 Race Vehicle Decals - All Official Decals must be presented on the vehicle using the original colors and may not be resized or have their aspect ratio adjusted.

13.3.1 Windshield/Helmet Visor Banner – All competitors will be required to properly display a Gran Turismo banner (windshield or helmet visor) during PPIHC Race Activities.

Prior to Technical Inspection, all competitors will be e-mailed a digital file to print the windshield banner/helmet visor. If preferred, a mailed windshield/helmet visor banner may be requested. All competitors/entries will be responsible for the application of the Gran Turismo banner in the specified location before receiving an Official PPIHC Technical Inspection decal. All competitors will be required to display this Gran Turismo banner on their vehicle and/or person during all Testing, Practice & Qualifying sessions, at Fan Fest, and on Race Day.

Requirements for displaying the Gran Turismo banner are as follows:

Entries with a front window/windscreen
One Gran Turismo windshield banner
Entries without a front window/windscreen
One Gran Turismo helmet visor banner

Any competitor failing to display the Gran Turismo windshield/helmet visor banner will not be eligible to take a green flag. No other decals/commercial branding may be

displayed on the windshield/windscreen. No modifications may be made to the Gran Turismo image/brand markings. An alternative form of representation may be arranged with the PPIHC's Race Director in cooperation with our partners from Gran Turismo if the banner causes visual impairment.

13.3.2 – Approved PPIHC event decals must be displayed in a prominent area on both sides of the race vehicle during all phases of the event.

13.3.3 – All required PPIHC event and/or event sponsor decals or markings must be present in their specified location as noted in the event bulletins. Any unauthorized alteration such as cutting or modifying is not allowed. Original colors, fonts, logos backgrounds cannot be resized or have their aspect ratio adjusted.

13.3.4 - A minimum fine of $500 per alteration will be issued to any violators. Participants are responsible for the application of required decals. See Diagram A for required decals and location placement.

13.3.5 – Slogans, designs or advertising on the vehicles must be appropriate and acceptable to the Director of Competition or his/her designee.

13.3.6 – The PPAHCEM reserves the right to have any decals, marks or other items removed or covered at their discretion.

13.3.7 – Any accessory or product advertised as being used must be reported in writing to the PPAHCEM more than twenty-four (24) hours prior to the race.

13.4 Testimonial – No credentialed person shall make a false public statement concerning any product used or said to have been used in a PPAHCEM sanctioned competition. Violation may result in fine or disqualification.

13.5 Video Cameras – Video cameras are not permitted to be mounted on driver's helmets. The use of cameras and mountings must be approved by the Director of Competition. Cameras on vehicles may be subject to PPIHC approval.

13.6 Release of Media and Intellectual Property Rights

Any and all PPIHC events shall not be recorded or photographed for commercial purposes without the express written consent of The Pikes Peak International Hill Climb ("PPIHC").

All media (including images, photos, video footage, and audio recordings) and intellectual property rights related to or associated with PPIHC and PPIHC events (collectively, "Media"), including the Pikes Peak International Hill Climb auto race (the "Race"), belongs to PPIHC, and is wholly reserved in perpetuity to PPIHC and its licensees. All Media from or related to PPIHC events, including but not limited to photos and footage, are part of the PPIHC's intellectual property and can be used by PPIHC and/or its licensees for promotional purposes or any other purposes. All Media belongs

to PPIHC and is for the PPIHC's exclusive (except as agreed to by PPIHC), perpetual, and worldwide usage.

Any unauthorized use or sale of Media, including, but not limited to, reproduction, retransmission, or the making of or inclusion of Media into a broadcast, internet, web, motion picture, DVD or tape program, or any other form of distribution, without the prior express written consent of the PPIHC, is strictly prohibited. The licensing or sub-licensing of creative content from PPIHC events shall be strictly forbidden without the prior express written consent of the PPIHC. The PPIHC has the sole and exclusive rights to all creative content, including but not limited to images and footage taken by spectators at PPIHC events and/or persons without media credentials.

The PPIHC trademarked event name and logo, any and all PPIHC photos, and the PPIHC course map are the property of the PPIHC and may not be utilized in any form for product sales without express written permission from the PPIHC. Payment of appropriate licensing fee is required.

As an entrant, footage is to be used only for personal purposes and must not be used for any other purpose, commercial or otherwise. The PPIHC owns the rights and licensing for all footage from the 2027 Race including, but not limited to, any and/or all practice days, Race Day, and Fan Fest. All photos and footage are part of the PPIHC's intellectual property and can be used by the PPIHC for promotional purposes, sale and/or distribution. All media is for the PPIHC's non-exclusive, perpetual and worldwide usage.

All footage is the PPIHC's intellectual property and can be used by the PPIHC for promotional purposes, sale and/or distribution. If competitors would like a list of broadcast partners that the video could be distributed to (outside of the PPIHC's internal use), please contact the PPIHC directly.

13.7 Notice of Filming and Photography

When you enter a Pikes Peak International Hill Climb ("PPIHC") event or program, you enter an area where photography, audio and video recording may occur. By entering the event or program premises, you consent to interview(s), photography, audio recording, and/or video recording of yourself (collectively, "Materials"), and its/their release, publication, exhibition, reproduction, licensing, alteration, adaption, exploitation, or other use, in any format or medium now existing or hereafter created, and for any purpose, including but not limited to, web casts, promotional purposes, telecasts, advertising, publicity, and public relations by PPIHC and its affiliates, representatives, sponsors, and licensees (collectively, "Affiliates"). You release PPIHC and its Affiliates, their officers, employees, and agents, and each and all persons involved, from any liability connected with PPIHC's or its Affiliates' exercise of the rights contained in this Notice, including, without limitation, liability for any violation of the right to publicity, for defamation, invasion of privacy, or emotional distress.

By entering the event or program premises, you waive all rights you may have to any claims for payment or royalties in connection with any use of these Materials, regardless

of the purpose or sponsoring of such use, exhibition, stream, broadcast, web cast, or other publication irrespective of whether a fee for admission to the program or event is charged. You also waive any right to inspect or approve any interview, photo, image, video and/or audio recording of yourself, taken by PPIHC or the person or entity designated to do so by PPIHC.

In the event of an accident/incident on or off the course, anyone attending the Event, whether credentialed or non-credentialed, may continue to film/shoot photos only if the driver is able to get out of the vehicle and there are no known injuries to the competitor, or anyone else involved. If the competitor is trapped in the vehicle, is unconscious or has significant obvious injuries, all parties in the vicinity will immediately cease capturing images either by camera, cell phone, or any other recording device and will instruct others to do the same. Any images or footage inadvertently captured by any spectator, race official, volunteer, sponsor, crew member or anyone else attending the Event will immediately be turned over to, and become the property of, the PPIHC, their legal representatives, and/or law enforcement. The PPIHC owns all media (including images, photos, video footage, and audio recordings) and intellectual property rights related to or associated with any crash/incident/or sensitive situation. The PPIHC may deem any media captured as “restricted” and that media belongs to PPIHC and is for the PPIHC’s exclusive (except as agreed to by PPIHC), perpetual, worldwide usage. This includes any and all Media captured that the PPIHC deems restricted.

You agree that you have been fully informed of your consent, waiver of liability, and release before entering the event.

PART XIV – Appearance

14.1 – All vehicles entered must be race ready and maintained so as to present a neat, attractive appearance. No primered or damaged body parts will be allowed. All owners, drivers and crews are responsible for the maintenance of their pit area and are expected to present a neat and respectable appearance at all times.

PART XV – Supplemental Information

15.1 – Competitors will be supplied supplemental information concerning day-to-day, hour-to-hour activities and requirements in addition to protocol information. Such supplemental instruction carries the same weight of importance as the items addressed in this Rule Book. Supplemental information will come in the form of (but not limited to) Bulletins, Addendums, Policies and Procedures, electronic mail notifications, and in the Terms of Acceptance. It is the competitor / entry owner’s responsibility to read and adhere to all supplemental information and instruction.

100 – CAR SAFETY AND CONSTRUCTION

TECHNICAL REGULATIONS and SPECIAL RULES

All participants acknowledge and agree that racing is an inherently dangerous activity. The PPAHCEM seeks to maintain safe conditions for the Competitors taking into account all aspects of the event.

PPAHCEM may secure all safety, medical, fire-fighting, and rescue personnel and equipment which the Officials deem necessary or appropriate for the event including, but not limited to, medical facilities, ambulances, fire and rescue equipment, wreckers, tow trucks and/or push trucks, and any other equipment that they deem necessary or appropriate. The Officials may identify unsafe conditions that may exist on the track and at any accident scene and take any necessary or appropriate action without limitation, including temporarily stopping or delaying the event if safety requires such action. The Officials may prohibit any Driver, Crew Member, Official or Car from entering or continuing in the event if the Officials consider any such individual or equipment to be unsafe or dangerous.

Any entrant who is non-English speaking must have a translator.

Rookies are required to attend a rookie orientation which may include on-track activities. Failure to successfully complete rookie orientation could result in dismissal from the event with no refund. Final approval will be given by the Director of Competition.

101. Safety Policies – Whenever there is a conflict between a safety provision herein and any other rule, the safety provision shall take precedence.

> 101.1 – Any item that is found unapproved, i.e. seat belts, helmets, etc. will be confiscated until after the event. No competitor will be allowed to compete until they have passed Technical Inspection.

102. Spectator Safety – The Section Stewards may cancel or postpone an event if any arrangements known to them are, in their opinion, unsafe.

103. Participant Safety – The Section Stewards shall have the authority to order off the course any vehicle, which, in their opinion, constitutes a menace to other participants, to itself, or to the public.

104. Course Conditions – The Race Director and/or Director of Competition shall not permit any event to start or continue if, in his/her opinion, conditions are not suitable for competition.

105. Roll Cage – All vehicles must incorporate the use of a roll cage. The roll cage must be designed to withstand compression forces which may result from the weight of the vehicle (including driver and gear) coming down on the roll cage structure and take fore and aft loads which may result from the vehicle skidding along the ground on the roll cage. Roll cages must be contained entirely within the body compartment. Any roll cage that does not meet the minimum weight per material specifications defined in the chart shown in 105.2 and/or has a certification that is not recognized by the PPIHC, must be accompanied by documentation (ex. manufacturer's FIA Roll Cage homologation) during the Request for Invitation

process. All requests for bolt in cages must be approved by the Director of Competition. Requirements for bolt in cages, if approved, can be found in Section 105.12 and Section 106.

105.1 – Basic Design Construction: (see Diagram B)
The main roll cage hoop must extend the full width of the competitor compartment and must be a minimum of two (2) inches (5.08 cm) above, and not more than ten (10) inches (25.4 cm) behind the top of the competitor's helmet when sitting in the normal position (all vehicles except Open Wheel, see Open Wheel Rules 504.4).

105.2 – Material: The roll cage must be constructed of steel tubing or 6061-T6 aluminum. The roll cage material shall be the same as the material used in the frame (steel or aluminum). It will be the responsibility of the vehicle owner to provide documentation as to the specifications of the material used if requested. The roll cage must be gusseted in all four corners. It is recommended that all gussets be made of seamless tubing thereby eliminating any sharp edges which might endanger the competitor in the event of a roll-over. Titanium is not an approved roll cage material; all materials not included in the chart below must be formally submitted in advance to the Director of Competition for approval.

Rear bracing struts are to be incorporated into the construction of the roll cage. For the purpose of determining tubing sizes, the vehicle weight is determined with the competitor in the driver seat. The **minimum** size of tubing shall be determined as follows:

Vehicle Weight	**Roll Cage Material**				
	Mild Steel	**D.O.M.**	**Alloy Steel**	**Aluminum (6061-T6)**	**Docol R8**
Under 1000 lbs. (Under 453.59 kg.)	1.375 x 0.090 in. (34.925 x 2.286 mm)	1.375 x 0.090 in. (34.925 x 2.286 mm)	1.250 x 0.095 in. (31.75 x 2.413 mm)	1.500 x 0.125 in. (38.1 x 3.175 mm)	1.25 X 0.095 in. (31.75 x 2.413 mm)
1001-2000 lbs. (454.05-907.18 kg.)	1.500 x 0.090 in. (38.1 x 2.286 mm)	1.500 x 0.090 in. (38.1 x 2.413 mm)	1.375 x 0.095 in. (34.925 x 2.413 mm)	1.500 x 0.188 in. (38.1 x 4.775 mm)	1.375 x 0.095 in. (34.925 x 2.413 mm)
2001-3000 lbs. (907.64-1360.78 kg.)	1.500 x 0.120 in. (38.1 x 3.048 mm.)	1.500 x 0.095 in. (38.1 x 2.413 mm)	1.375 x 0.095 in. (34.925 x 2.413 mm)	1.625 x 0.188 in. (41.275 x 4.775 mm)	1.375 x 0.095 in. (34.925 x 2.413 mm)
3001-4000 lbs. (1361.23-1814.37 kg.)	1.750 x 0.120 in. (44.45 x 3.048 mm)	1.750 x 0.120 in. (44.45 x 3.048 mm)	1.625 x 0.095 in. (41.275 x 2.413 mm)	1.750 x 0.188 in. (44.45 x 4.775 mm)	1.625 x 0.083 in. (41.275 x 2.108 mm)
Over 4000 lbs. (Over 1814.37 kg.)	2.000 x 0.120 in. (50.8 x 3.048 mm)	2.000 x 0.120 in. (50.8 x 3.048 mm)	1.750 x 0.095 in. (44.45 x 2.413 mm)	2.000 x 0.188 in. (50.80 x 4.775 mm)	1.750 x 0.095 in. (44.45 x 2.413 mm)
Standard Yield Strength	32,000	72,000	70,000	35,000	100,000

Monocoque vehicles are allowed but must consist of a full safety pod that includes an integrated overhead roll over system designed to withstand multiple compression impacts and has been fully tested. Results of testing must be submitted for approval during the registration period.

Where bolts and nuts or other fasteners are used, the bolts shall be at least three-eighths inch (3/8") (10mm) SAE Grade 5 equivalent or greater.

105.2.1 Production vehicles over 4,000lbs. may not use a factory dash bar as support. It must include an additional dash bar made out of the same material as the roll cage.

105.2.2 Production vehicles under 4,000lbs. do not require an additional, non-factory dash bar. However, if the factory dash bar is used as support, it must tie into the A pillar on both sides.

105.3 – General Construction

105.3.1 – One (1) continuous length of tubing shall be used for the main hoop member with smooth continuous bends and no evidence of crimping or wall failure. The radius of bends in the roll cage hoop (measured at centerline of tubing) shall not be less than three (3) times the diameter of the tubing. Whenever possible, the roll cage hoop should start from the floor of the car, and, in the case of tube frame construction, be attached to the chassis tubes by means of gussets or sheet metal webs with support tubes beneath the joints to distribute the loads. It is recommended that gussets be used.

105.3.2 – Welding shall conform to American Welding Society 01.1:2002, Structural Welding Code, Steel Chapter 10, Tubular Structures. Whenever 01.1 refers to "the Engineer" this shall be interpreted to be the owner of the vehicle. Welds shall be continuous around the entire tubular structure.

105.3.3 – All welds shall be visually inspected and shall be acceptable if the following conditions are satisfied:

105.3.3A – The weld shall have no cracks.

105.3.3B – Thorough fusion shall exist between weld metal and base metal.

105.3.3C – All craters shall be filled to the cross section of the weld.

105.3.3D – Undercut shall be no more than 0.01 inch (0.254 mm.) deep.

105.3.3E – Aluminum bronze or silicon bronze welding technique is permitted, but extreme care shall be used in preparation of parts before bronze welding and in the design of the attaching joints.

All welding must be approved by the Director of Competition.

105.4 – Bracing: Two (2) fore-aft braces made of tubing at least equal to that required for the main hoop are required. Diagonal lateral bracing to prevent distortion of the hoop is recommended but not required. The fore-aft bracing must be attached as near as

possible to the main roll hoop but no more than six (6) inches (152.4 mm.) below the top of the hoop and at an inclined angle of at least thirty (30) degrees.

105.4.1 – Side Bars: All vehicles must have a minimum of two (2) side bars on the passenger side and three (3) side bars on the competitor's side (excluding frame rail on either side).

105.5 – Mounting: Roll cages and braces must be attached to the frame of the vehicle whenever possible. Mounting plates, regardless of whether welded or bolted to the frame, must be at least three-sixteenths inch (3/16") (4.76 mm.) thick. In vehicles with unitized or frameless construction, or vehicles with frames to which frame mounting is impractical, mounting plates must be used to secure the roll cage structure to the basic structure of the vehicle. It is important that the load be distributed over as large an area as possible.

105.6 – Padding: Except where forward or side vision is affected, any portion of the roll structure which might be contacted by the competitor's helmet shall be covered with energy absorbing material (high density) to a minimum thickness of one-half inch (1/2”) (12.70 mm.). The energy absorbing material must be covered by protective wrapping. (Styrofoam and Ensolite® are examples of energy absorbing padding.)

105.7 – Removable Braces: Removable braces must be carefully designed to be at least as strong as a permanent installation. Removable connections must be a type approved by the Director of Competition.

105.8 – Roll Cage: The main roll hoop must be as specified in 105.1. A similar hoop must be in front, supporting the front hoop to the main hoop at each side of the tip. Alternately, the front hoop may be constructed by using two side hoops which follow up the front hoop. These two side hoops are connected by a tube over the top of the windshield. The material of the forward portion of the cage shall be at least as recommended.

105.9 – Subfloor: All vehicles must have floorboards or under pans beneath the body (including legs and feet) of the competitor with a minimum of .125” (3.175 mm.) thickness aluminum, or one sixteenth inch (1/16”) (1.588 mm.) steel. All other materials must be approved by the Director of Competition.

105.10 – Driver's Compartment: The driver must be able to exit the driver's compartment with ease. All door locks must be inoperable. Doors must be able to open both inside and outside. The driver must be able to reach all switches, valves and levers while strapped securely in the seat.

All roll cage bar assemblies are subject to acceptance by the Director of Competition. All roll cages must meet regulations and may be subject to sonic testing and/or an inspection hole at least 3/16 inch (4.763 mm.) diameter, but no greater than 1/4 inch (6.35 mm.) diameter may be drilled in a non-critical area of any tubes.

105.11 – The Director of Competition has the authority to approve any roll cage system which does not meet or exceeds the intent of the rules.

105.12 – The cage need not be removable. It may be bolted and/or welded to the car.

105.13 – It shall attach to the car in at least six (6) points, consisting of the basic cage with six (6) points and two braces.

105.14 – The forward part of the cage shall be mounted to the floor of the vehicle.

105.15 – Removable roll cages and braces shall be very carefully designed and constructed to be at least as strong as a permanent installation. If one tube fits inside another tube to facilitate removal, the removable portion shall fit tightly and shall bottom, by design, and at least two (2) bolts shall be used to secure each such joint. The telescope section shall be at least eight (8) inches (203.2 mm) in length. Minimum bolt diameter is 3/8 inches (10 mm).

105.16 – The front or side hoops may extend through the dash pad. This includes the forward part of the door panel if it is an extension of the dash panel.

105.17 – One (1) bar is recommended in a horizontal plane between forward cage braces in the dash area.

106. Mounting Plates

106.1 – Each mounting plate shall be mounted to the floor and at least .080 in. (2.032 mm) thick if welded and 3/16" (4.763 mm) thick (with appropriate backing plates) if bolted. There shall be a minimum of three (3) bolts per mounting plate if bolted. If the mounting plates cannot be mounted to the floor due to vehicle design (i.e. electric vehicles) they must be preapproved by the Director of Competition or his designee.

106.2 – Each mounting plate shall not be greater than 100 square inches and shall be no greater than twelve (12”) inches (304.8 mm) or less than two (2”) inches (50.8 mm) on a side.

106.3 – Whenever possible, mounting plates shall extend onto a vertical section of the structure (such as a rocker box). The mounting plate may be multi-angled.

106.4 – Any number of tubes may attach to the plate or each other.

106.5 – The thickness of mounting plates bolted to the structure of the car shall not be less than the thickness of the roll hoop or brace that they attach and shall be backed-up with a plate of equal dimensions on the opposite side of the panel, with the plates through-bolted together. A minimum of three (3) bolts per mounting plate is required for bolted mounting plates. All hardware (bolts) shall be Grade 5 or better with 3/8" (9.525 mm) diameter minimum. Mounting plates welded to the structure of the car shall not be

less than .080" (2.032 mm) thick. Whenever possible the mounting plates should extend onto a vertical section of the structure (such as door pillar).

106.6 – Hardware (Bolts) – All hardware shall be Grade 5 or better – 5/16" (7.9375 mm) minimum diameter.

107. Seat System

107.1 – All vehicles must have an approved seat designed to stabilize and protect the driver during all race conditions. The seating system should provide lateral support on both left and right sides.

It is necessary to be in a reclining position, to provide a kick-up (roll-up) forward of the buttocks of sufficient height and strength to prevent forward movement and/or rotation of the torso under the seat belt.

107.2 – Only metal or approved composite seats are allowed.

107.3 – The driver's seat shall be firmly mounted to the structure of the car.

107.3.1 – Seats homologated to, and mounted in accordance with, FIA standard 8855-1999 or higher need not have the seat back attached to the roll structure. The head restraint on non-integral seats shall have a minimum area of thirty-six (36) square inches (23225.8 sq. mm) and be padded with a non-resilient material such as Ethafoam®, Ensolite®, or other similar material with a minimum thickness of one (1”) inch (25.4 mm). Padding meeting SFI Spec 45.1 is recommended.

107.3.2 - The head restraint shall be capable of withstanding a force of two-hundred (200) lbs. (90.719 kg.), in a rearward direction. The head restraint support shall be such that it continues rearward or upward from the top edge in a way that the driver's helmet cannot hook over the pad. The padded surface shall touch the helmet; it shall not be under fiberglass or other hard material.

107.3.3 – In vehicles where the seat is upright and has not been tested or rated, the back of the seat is required to have a seat back brace mounted to the cage, unless preapproved by the Director of Competition or his designee.

108. Driver’s Restraint System – All drivers in PPIHC sanctioned events shall utilize a 5, 6, or 7-point restraint harness meeting the following specifications. A 7-point restraint harness is recommended. **Arm restraints are required on all open air vehicles.** The restraint system installation is subject to approval of the Director of Competition.

108.1 - Arm restraints shall not be worn in a manner which limits the ability of the driver to provide visible signals to other competitors while on course.

108.2 – The shoulder harness shall be the over the shoulder type. There shall be a single release common to the seat belt and shoulder harness. When mounting belts and

harnesses it is recommended that they be kept as short as reasonably possible to minimize stretch when loaded in an accident.

The shoulder harness shall be mounted behind the driver and supported above a line drawn downward from the shoulder point at an angle of 10-20 degrees with the horizontal. (See Diagram C on page 100) The seat itself, or anything added only to the seat shall not be considered a suitable guide. Guides must be a part of the roll cage or a part of the car structure.

Only separate shoulder straps are permitted. ("Y" type shoulder straps are not allowed.) "H" type configuration is allowed.

108.3 – The single anti-submarine strap of the 5-point system shall be attached to the floor structure and have a metal to metal connection with the single release common to the seat belt and shoulder harness.

108.4 – The double leg straps of the 6-point or 7-point system may be attached to the floor as above for the 5-point system or be attached to the seat belt so that the driver sits on them, passing them up between the legs and attaching either to the single release common to the seat belt and shoulder harness, or attaching to the shoulder harness straps. It is also permissible for the leg straps to be secured at a point common to the seat belt attachment to the structure, passing under the driver and up between the legs to the seat belt release or shoulder harness straps.

All straps shall be free to run through intermediate loops or clamps/buckles.

108.5 – Each seat (lap) and shoulder belt of the harness (5, 6, or 7-points) shall have an individual mounting point (i.e. 2 for seat belt and 2 for shoulder belt minimum). Six or 7-point system anti-submarine straps may share a mounting point with one or both seat (lap) belt(s). The minimum acceptable bolts used in the mounting of all belts and harnesses are SAE Grade 5/Metric 8.8. Mounting hardware, including eye bolts, as provided by the belt manufacturer, may also be used for mounting belts and harnesses. Where possible, seat belt, shoulder harness, and anti-submarine strap(s) should be mounted to the roll structure or frame of the car. Where this is not possible, large diameter mounting washers or equivalent should be used to spread the load. Bolting through aluminum floor panels, etc., is not acceptable. Holes in the roll cage to accommodate the installation of the harness must be bushed and welded completely.

108.6 – All driver restraint systems shall meet one of the following (or newer): SFI specification 16.1, 16.5, 16.6 or FIA specification 8853/98 or 8854/98.

> 108.6.1 – Restraint systems meeting SFI 16.1, 16.5 or 16.6 shall bear a dated SFI Spec label. Harnesses certified to SFI Specifications must have a conformance label indicating a date of manufacture less than 2 years previous to the date of competition, or a conformance label indicating that the certification has not yet expired.

108.6.2 – Restraint systems homologated to FIA specification 8853/98 and 8854/98 will have a label containing the type of harness designation (‘C-###.T/98 or D-###.T/98) and date of expiration which is the last day of the year marked. All straps in this FIA restraint system will have these labels.

108.6.3 – All restraint systems must appear as new with no damage. The Director of Competition has the right to reject any restraint system that is not installed properly or does not appear as new.

108.7 – Harness Threading: Assemble in accordance with manufacturer’s instructions.

108.7.1 If no manufacturer instructions are given, use the methods shown below.

Wrap Systems to Roll Bar Installation and Brackets Assembly

3-Bar Slide Wrap

This installation is commonly used for

- Shoulder strap roll cage installation
- To assemble open strap ends to brackets.

Instructions:

1. Slide the webbing through slot 1 and 2 as shown

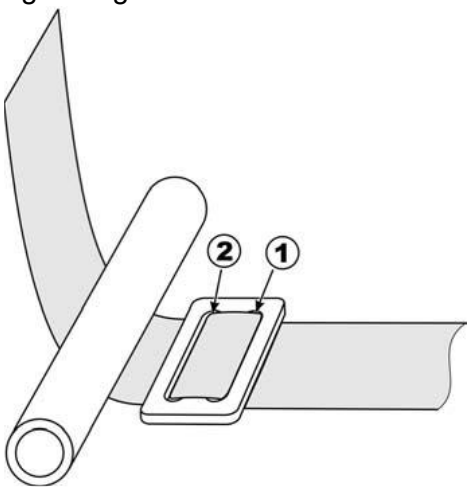

2. Make sure the protruding strap end is long enough to have sufficient webbing length available for the following wrapping procedure. A minimum of 14” – 16” (360 – 400 mm) is recommended.

3. The 3-bar slide shall be positioned as close as possible to either the roll cage bar or to the end bracket.

4. Wrap the free strap end from underneath around the roll cage bar or through the webbing slot of an end bracket.

5. In case of the combination of a 2” (50 mm) bracket slot and 3” (75 mm) webbing, fold the webbing in as shown.

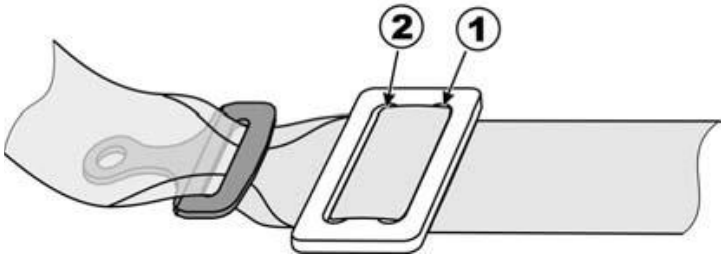

6. Wrap webbing back through slot 2 and 1.

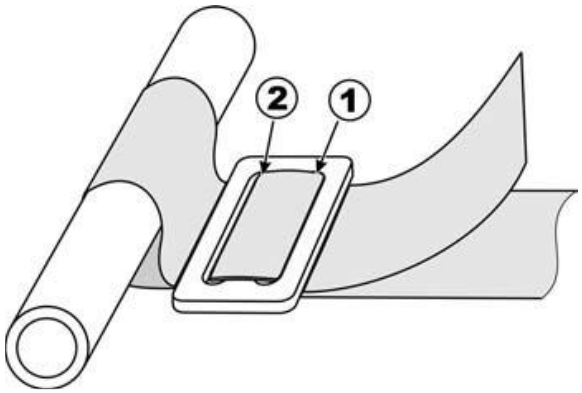

7. Fold strap end back and run it through slot 2 again.

8. Make sure the strap end protrudes at least 4“(100 mm) or even longer from slot 2. If it is less than 4” disassemble and start over again. If longer, roll in the strap end and fix it by a cable tie to the shoulder belt.

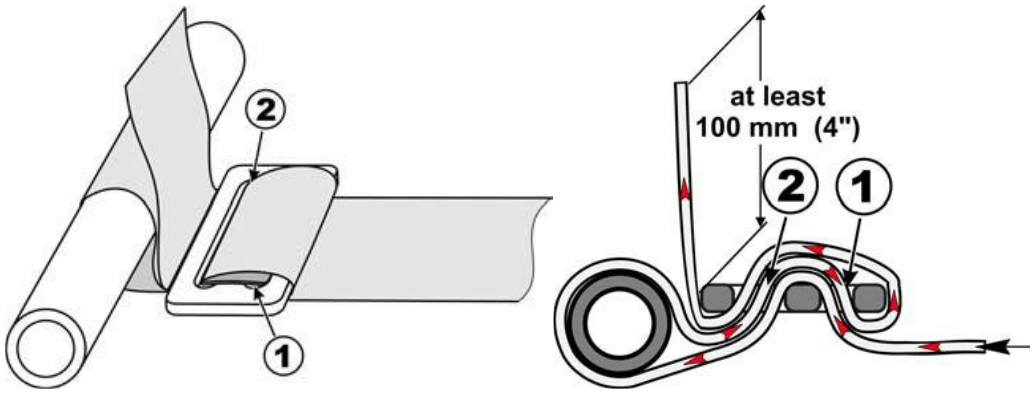

9. Check again for proper shoulder belt tilt lock adjuster positioning and for the 3-bar slide to be as close as possible to the roll cage bar or end bracket.

Lightweight D-Ring (2”/50 mm and 3”/75 mm) Wrap

This installation is commonly used for:

- Shoulder strap installation to roll cages, elbow brackets in open wheel race cars, and HANS adaptor for open wheel race cars
- 2” (50 mm) version also to assemble open strap ends to brackets.

Wrapping Instructions:

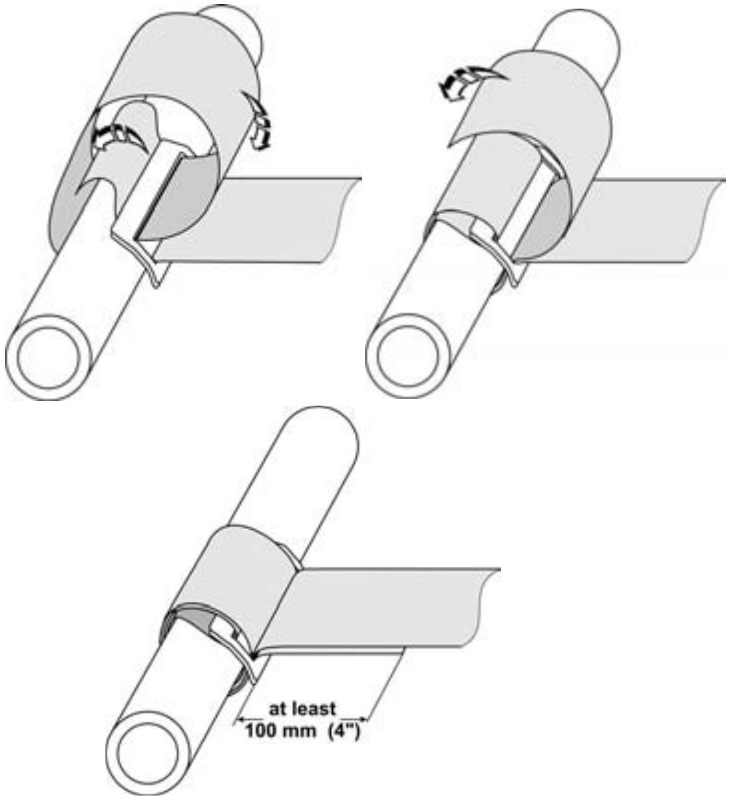

1. Position D-Ring slide to roll bar with wider bar atop.

2. Slide a minimum of 24” (600 mm) of strap length through D-Ring slide and from underneath around roll bar first loop.

3. Slide strap from atop through D-Ring slot towards roll bar and back between roll bar and first loop until it protrudes from slot in D-Ring slide.

4. Pull at shoulder belt to check that wrap will tighten when being loaded.

5. Wrap strap end around roll bar again [third loop] and thread through D-Ring slide again. Shoulder belt is now sandwiched between first loop webbing and protruding strap end.

6. Make sure strap end protrudes at least 4” (100 mm).

Webbing should be crossed if the distance from the seat openings to the mounting bolt point or harness bar exceeds 18” (450 mm). When mounting to a harness bar with a wrap mount and the distance to the bar from the seat is less than 18” (450 mm), a section of roll bar padding, fixed with cable ties, should be added to the outside of each of the shoulder harnesses to ensure that they cannot further separate when unloaded. 3-Bar Adjuster pictured in the examples is not positioned next to the bar and the final locking portion of the wrap has not been completed. This will result in significant slippage through the adjuster and significantly more elongation of the shoulder belts.

Installation Options

Bolt-in Wrap Bracket Assembling

This installation is commonly used for:

- Racing harness with 2” (50 mm) or 3” (75 mm) webbing and open strap ends
- A bolt-in wrap bracket with 2” (50 mm) webbing slot or a bolt-in wrap bracket with 3” 75 mm webbing slot.

Instructions:

1. Webbing shall wrap from the body facing side of bracket up into slot 1.

2. Pull through approx. 11” (270 mm) and fold down through slot 3 temporarily leaving 2” (50 mm) of slack.

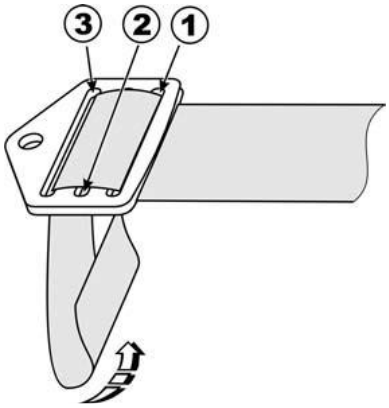

3. Fold back up from the body side through slot 1 and back down through slot 2.

4. Fold back through slot 3 and finally through slot 1.

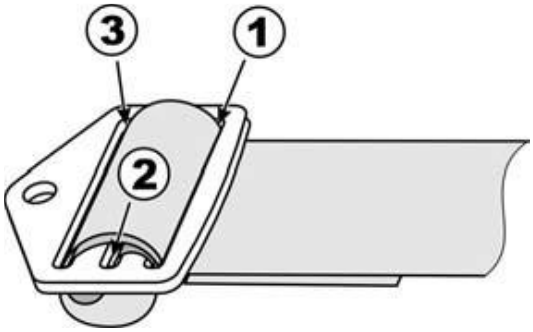

5. Pull at belt to check that wrap will further tighten.

6. Make sure the protruding strap end is at least 2” (50 mm) long. The webbing must be wrapped tightly.

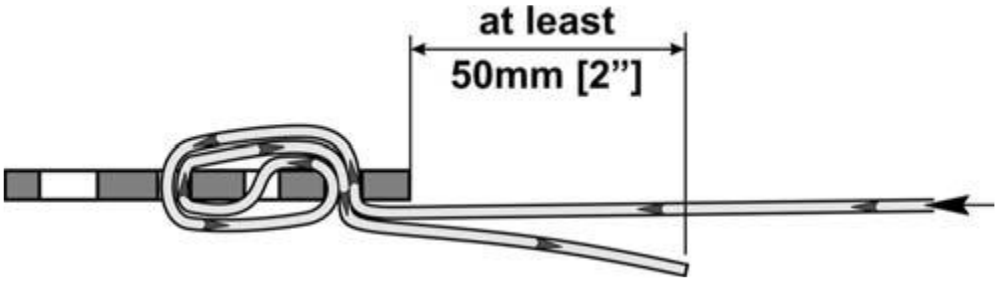

Lightweight Wrap System (LV 4 Hardware)

Instructions:

1. Place LV 4 with its thicker bar onto the bracket/latch.

2. Run strap end through slot at LV 4 and then from underneath through webbing slot at bracket. Pull through at least 8” (200 mm) of webbing. Fold strap end over the wider bar of LV 4 and back through the gap between bracket bar and LV 4 bar.

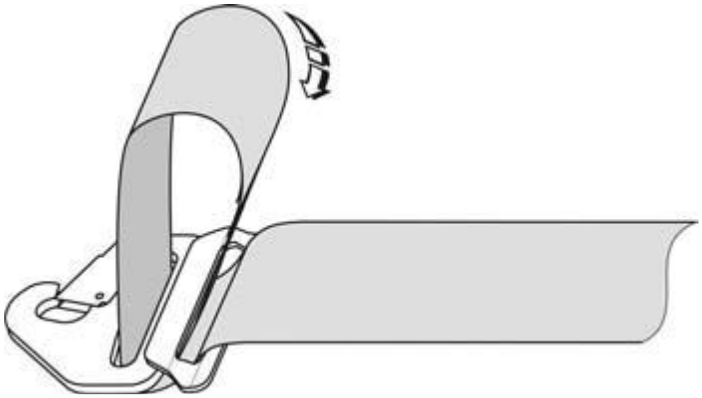

3. Slide strap end further through the webbing slot at bracket/latch and then fold the strap end through the slot at LV 4.

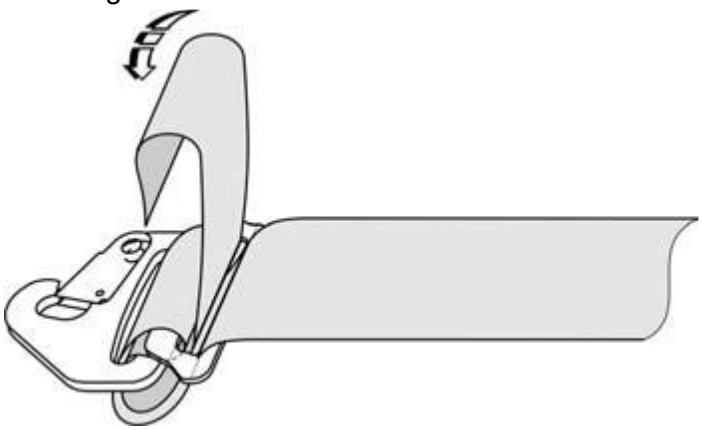

4. Pull at the load taking strap and the bracket to make sure the webbing is properly clamped by the wrap hardware.

5. If this is not achieved, check for proper strap routing and follow these instructions step by step again.

6. If the protruding webbing is significantly longer than the minimum of 2” (50 mm), you may fold it over again, run it through webbing slot of the bracket/latch and again back and through the webbing slot at LV 4.

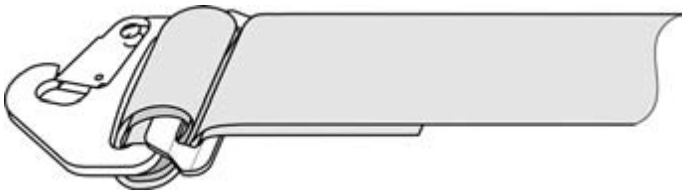

7. In this case, the strap end now protrudes from the down side of the LV 4. The webbing must be wrapped tightly.

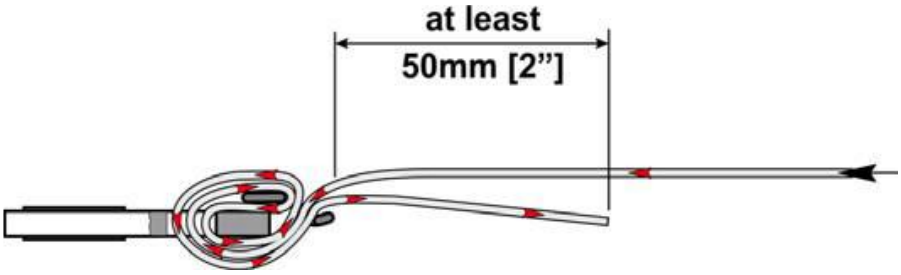

Eye Bolt Installation for Snap-on and Carabineer Brackets

Eye-bolts for Snap-on brackets may be installed to:

- Another anchor point provided by the car manufacturer.
- Anchor points provided by the roll cage manufacturer.
- A newly created anchor point in conjunction with a proper reinforcement plate.

Assemble eye bolt and spring washer as shown in figure. Bolt in eye bolt and tighten securely. The optimum torque setting is 40 Nm (350 lb. in.). Pull either screwdriver or similar tool through eye and turn clockwise to tighten the bolt securely. Make sure the eye's ring is pointing in direction of pull as shown in drawing below. This position will reduce the risk of unintended loosening of the eye bolt by torque forces applied by the harness during racing. If you cannot achieve this position by further tightening or loosening the bolt by a maximum of ¼ turn, dismount the eyebolt and use 2 spring washers to come closer to the recommended position.

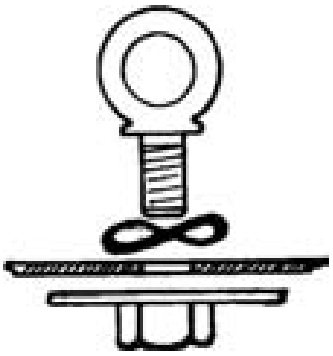

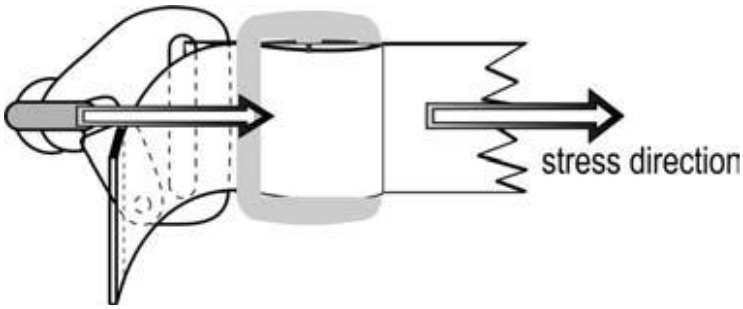

Lock Nut Carabiner

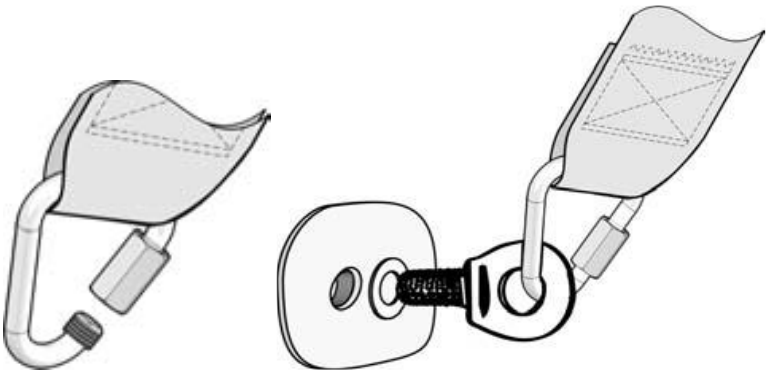

1. The webbing must always be positioned on the smaller section of the triangular carabiner. The lock nut must always be positioned in the free section between the eye bolt and the webbing.

2. The lock nut always must fully catch the counter thread. No thread turn must remain free from the lock nut.

Bolt-in Brackets
All brackets must be installed in direction of pull to avoid extensive stress to the anchor points during driving or during an accident.

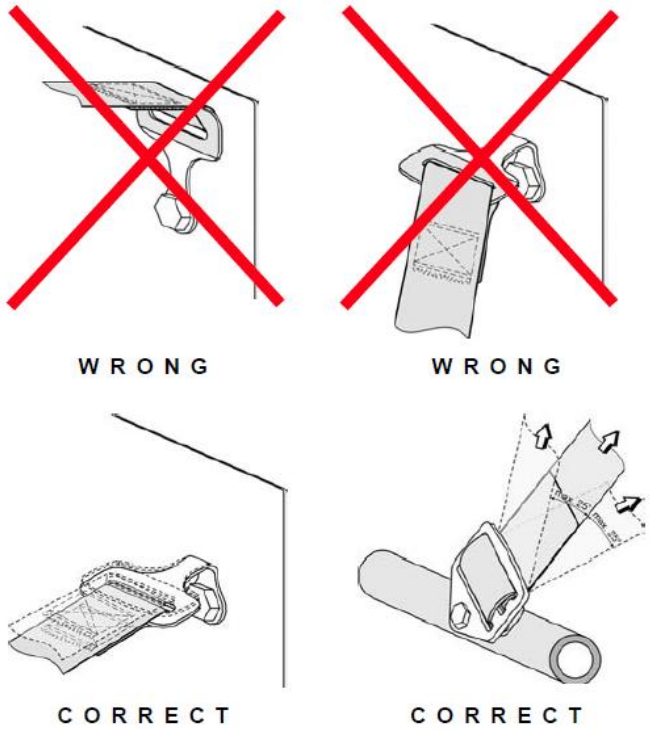

108.7.2 – Driver's Safety Equipment: All required driver's safety equipment must be worn at all times while on track. The participant agrees to bear the ultimate responsibility at all times to ensure their own safety by complete and proper usage of safety equipment, and to comply with all PPIHC rules, regulations, and agreements, including but not limited to those in the PPIHC Rule Book.

109. Steering & Suspension

109.1 – The top of the steering post must be padded with resilient material or a collapsible steering column subject to approval by the Director of Competition.

109.2 – All steering locks shall be removed, including all pieces and hardware in the locking mechanism.

109.3 – All bolts securing steering mechanism and suspension must be attached with self-locking type nuts or be safety keyed or wired.

109.4 – A manufacturer approved quick-release (no plastic parts) removable steering wheel is required unless the vehicle is equipped with a collapsible steering column and the factory steering wheel is required to maintain the vehicles electronic functionality.

109.4.1 – **Airbags must be removed or disabled.** Documentation will be required at Technical Inspection if airbags are disabled.

109.5 – Captive washers on all rod ends (Heim joints).

109.6 – All monocoque vehicles are required to have wheel and suspension tethers. Subject to approval by the Director of Competition.

110. Magnetic Particle Inspection (Magnaflux/Zyglow) – Particle inspection as a safety requirement is recommended on all vehicles.

111. Brakes & Hub Assemblies – Vehicles must be equipped with a braking system which will operate the brakes effectively on all four wheels. It is mandatory that all vehicles have dual master cylinders or a dual reservoir master cylinder. Electric braking and steering systems are subject to approval from the Director of Competition / PPIHC.

112. Wheels – Carbon Fiber wheels are prohibited.

113. Fire Equipment

113.1 – All vehicles are required to have an FIA Technical List 16, FIA Technical List 52, or SFI 17.1 plumbed-in fire suppression systems. All systems must be installed as per the manufacturer's requirements and to applicable FIA or SFI standards. All systems shall be identified with two (2) circle "E" decals, one at the activation location and the second on the outside bodywork in line with, or as near to, the activation location as possible. A second activation point is strongly recommended for use by emergency responders. It is recommended that vehicles be equipped with a hand-held fire extinguisher containing at least 2.5lbs of suppressant, preferably clean gas agents such as Novec 1230, FE36, or Halotron. Halon is now considered environmentally hazardous and no longer permitted for use. Additionally, powder extinguishers are prohibited due to their tendency to become densely packed and less effective.

Additional fire suppression systems, hand held extinguishers, and/or capacity are allowed.

113.2 – EV, Hybrid, and/or any vehicles powered by lithium or similar batteries must use aforementioned FIA or SFI spec fire suppression system using a cooling and non-conductive suppressant, such as clean gas agents Novec 1230, FE36, or Halotron. Halon is not allowed.

Vehicles using alternative fuels, biofuel, or alcohol fuels must use aforementioned FIA or SFI spec systems capable of suppressing applicable fuel fire.

113.3 – The fire suppression system and any additional system(s) or hand held extinguisher(s) shall be securely mounted in the cockpit within the vehicle's caged crash structure, preferably using a mount incorporating anti-torpedo tabs to prevent bottle(s) from sliding. All mounting brackets shall be metal, and hand held extinguishers must use a quick-release style strapping system with mount. Brackets shall be those designated by the manufacturer for 'vehicular' use.

113.4 – All fire suppression systems and hand held extinguishers must display a capacity and/or pressure gauge and indicate fully charged. Remote charge systems and systems without a pressure gauge may be checked for compliance by weighing bottle(s) with remote link hose and CO2 cartridge housing.

All fire suppression systems and hand held fire extinguishers are required to be serviced every two years as per the FIA and SFI, or per the manufacturer's requirements, whichever comes first. Services and recertifications must be performed by the manufacturer or one of their authorized servicing agents and a service label affixed to the bottle indicating the date of last service performed and date of next service due. Only a recertification and service label from an authorized service center of that manufacturer will be accepted.

System must be active prior to vehicle leaving stage start with mechanical pins removed (mechanical systems) or electrical control box switched to on/armed position (electric systems).

113.5 – The entrant or crew chief of each vehicle must have displayed in the pit a fully charged hand held extinguisher with a minimum of five (5) pound capacity of dry powder or clean agent gas or 10lbs fire fighting foam extinguisher. A pressure gauge and current inspection tag shall be attached to each fire extinguisher.

113.5.1 Each fire extinguisher must be labeled with the vehicle's number and include a one year or less certification.

114. Competitor Uniforms – All competitors must display one of the following on the upper left breast portion of the competitor's suit, outer racing garment and/or protective gear.

- 2027 PPIHC Competitor Patch (included in 2027 Acceptance Packet)
- Dated 2027 PPIHC logo (request logo file from alex@ppihc.org)
- Non-dated PPIHC logo (request logo file from alex@ppihc.org)

The patch must be adhered or sewn in a reliable, professional manner and must be displayed at all times racing gear is worn on the mountain. No additional patches will be distributed during the registration process. It is the competitor's responsibility to ensure the Official Event Patch is appropriately displayed prior to Race Week.

If you have more than one suit, each will need to have an Official Event Patch. This will be checked at Technical Inspection, where you are required to present all suits you plan to wear

throughout the week. Competitors may be fined if their patch is in the improper place or not present at any time during Race Week, Practice, Qualifying and/or Race Day.

115. Required Safety Equipment

115.1 – It is mandatory for the competitor to wear his or her helmet, head and neck restraint, fire suit, shoes, eye protection, gloves, seat belts and shoulder harnesses, and arm restraints/window netting (in vehicles required to have) while operating the race vehicle. Window nets may be down and gloves removed following completion of the race on the return to the pits.

Hair protruding from beneath a driver's helmet must be completely covered by fire-resistant material. Drivers with facial hair must wear face shields of fire-resistant material (i.e. balaclava or helmet skirt).

All removable dental appliances, rings, watches and other jewelry and comparable items must be removed before operating the race vehicle.

115.2 – Each driver must wear the following equipment in all on-track sessions.

115.2.1 – A safety helmet shall be worn by all drivers. Helmets certified to the following standards or newer are permitted.

Snell Memorial Foundation - SA2020 and SA2025
SFI Foundation - Spec 31.2, Spec 31.2A
British Helmet Standard - BS 6658: 1985
FIA – 8859, 8859-2024 ABP and 8860-2018

Three years after helmets have been upgraded by Snell, competitors will be required to meet or exceed the new standards.

115.2.2 – Helmets should be equipped with a face shield; if not, the use of goggles is required. Helmets will be subject to inspection at each event by the technical, safety and/or medical representative.

115.2.2A – The competitor's name must be lettered on both sides of the helmet in a manner that makes it easily readable from a reasonable distance. The PPIHC recommends that information such as blood type and allergies be lettered on the helmet.

115.2.2B – Any corrective eye glass material used shall be of safety glass-type, and meet U.S. Government standards.

115.2.3 – Driving suits must be made of fire-resistant material and certified to SFI spec 3.2A/1 (3.2A/5 is recommend), or homologated by the FIA 8856-2000, which effectively cover the body, including neck, ankles and wrists (as of 2025, all fire suits are not to exceed 10 years of age). Multi-layer driving suits are recommended.

If outer suit is single or double layer, competitor is required to wear Nomex or equivalent long sleeved fire-retardant underwear. Fire-retardant underwear is not required with three (3) or more layer driving suits unless the suit manufacturer so specifies. Sleeves shall remain at full arm's length while the competitor is operating the race vehicle.

No outerwear will be worn over the fire suits while the competitor is operating the race vehicle at any time.

115.2.4 – SFI approved flame-retardant shoes (SFI 3.3/5), (FIA 8856-2000) gloves and socks are required. Shoes, gloves and socks may not contain holes, except those made by the manufacturer of the equipment.

115.2.5 – Head and Neck Restraints: It is mandatory that a SFI/FIA approved head and neck restraint device be worn during all competition sessions. Go kart donut is not approved.

115.2.6 – All closed cockpit cars shall have arm restraints or a window net.

115.2.7 – All competitors competing in open-cockpit cars must wear approved arm restraints and must be positioned on the arms per manufacture recommendation. It is recommended that open-cockpit cars include window nets.

116. On-Board Oxygen

116.1 – On-board oxygen is not required for PPIHC competitors. However, if competitors do choose to run with on-board oxygen, O2 tanks must be mounted and secured in the cockpit.

116.3 - All competitors running O2 shall be identified with two (2) triangle "O2 on board" decals

117. Electrical System

117.1 – Batteries must be installed in a safe manner. Battery must be in a leak-proof container. If a gel or dry cell type battery is used, no leak-proof container is required. The hot terminal must be insulated on all vehicles. All batteries shall be securely attached to the primary structure of the vehicle.

117.2 – All vehicles must be equipped with an operative on-board mounted starting system with on-board or auxiliary power, unless otherwise approved by the Director of Competition.

117.3 – The ignition switch shall be clearly labeled for the on/off positions and when belted in, the competitor must be able to reach these switches.

117.4 – Master electrical cut-off switch is mandatory and shall be mounted in a location where it can be operated by emergency response personnel (externally) and the driver while belted in the vehicle (internally). Master electrical cut off switch must disable fuel and electrical systems completely.

117.4.1 – All doors must still be operable once the master electrical power is cut-off. If the vehicle has electric operated/powered doors, there must be a mechanical release both inside the vehicle and outside of the vehicle for the doors to open.

117.5 – Electric vehicle drive motors are not permitted in an enclosed trunk compartment unless they are completely enclosed in an insulated container.

118. Fuel Systems – The Director of Competition must approve all fuel cells/bladders. All fuel cells must be purpose-built by a recognized manufacturer consisting of an outer protective shell/case with an internal bladder, proper venting and a check valve that will eliminate flow if the vehicle is not in the upright position. A manufacturer's fuel cell certificate must be provided if requested.

118.1 – A certified fuel cell is mandatory in all divisions and must be installed in the same location as the factory fuel tank or a location pre-approved by the Director of Competition or his designee. A second fuel cell or canister is mandatory for any additional fuel source used for combustion and must be contained within the roll cage. Nitrogen based sources are only allowed in the Unlimited Division.

118.2 – Only one (1) cell or two (2) PPIHC approved alternative fuel cylinders for propane or natural gas are permitted.

118.2.1 – Hydrogen fuel sources are permitted in Exhibition only (refer to Exhibition for requirements).

118.2.2 – A fuel cell vent pipe with ball check valves or an approved venting system is mandatory.

118.2.3 – Maximum cell capacity of 22 U.S. gallons (83.2791 liters) or equivalent.

118.3 – The fuel cell must be constructed, mounted and supported in a manner that will ensure every possible precaution has been taken to avoid rupture or leakage of the fuel cell. Fuel cell must be separated from the driver's cockpit by a steel or aluminum bulkhead.

118.4 – The fuel line may be replaced with reinforced neoprene hose. A check valve is recommended in the fuel cell connection.

118.5 – Any fuel shut-off valve or switch shall be clearly labeled for the on/off positions. When belted in, the competitor must be able to reach these switches.

118.6 – Fuel system, fuel lines, and fittings must be high pressure type and routed in such a way that they do not interfere with moving parts, they are securely insulated and are attached to the unibody/chassis. Any lines passing through the car must be covered with a metal or fireproof cover.

119. Fuels & Lubricants

119.1 – Fuel is restricted to gasoline, alcohol, diesel and approved alternative fuels, i.e.; compressed natural gas, propane, hydrogen, and electricity.

119.2 – All nitrogen based additives or materials are prohibited, except in the Unlimited Division.

119.3 – Engine, transmission and cooling system must be free of leaks; fluid leaks will not be tolerated.

120. Cooling

121.1 – Only water or other non-glycol based products will be allowed. No antifreeze or other glycol based coolants may be used. No methanol or other alcohol based liquids may be used for external cooling via spray system.

121. Fueling Procedures

121.1 – All fuel containers must be capped when not refueling.

121.2 – Appropriate fire extinguishers must be manned (pin pulled and in the hand of a crew member) during all refueling operations.

121.3 – A catch pan must be positioned to contain any fuel exiting the overflow tube.

121.4 – Any spilled fuel must immediately be diluted and reported to PPIHC officials.

121.5 – Contaminated fuel must be stored in a sealed container and properly disposed of according to EPA/Hazardous Material guidelines.

122. Vehicle Illumination

123.1 – Any vehicle operating on the Pikes Peak Highway under its own power before daybreak must have a headlight with enough candle power to illuminate at least 50 feet (15.24 meters), and a rear tail light (or reflective tape/reflector).

123. Competition Numbers & Names

123.1 – All vehicle numbers are assigned by the PPIHC and limited to a maximum of three (3) digits. The PPIHC assigns and approves the official race number, but does not provide the backing and/or decal and/or paint for the vehicle.

123.2 – There will be no duplication of vehicle numbers within the field.

123.3 – It is mandatory that the assigned numbers be displayed on the following:

1. Both sides of the vehicle.

2. Hood or Roof (or Nose as applicable).

All number displays must be in readable numerals at least twelve (12”) inches (30.48 cm.) high. The twelve (12”) inch minimum will be strictly enforced as race numbers are used to provide accurate manual back-up times and to track driver locations on the course.

123.4 – If the design of the vehicle cannot accommodate rule 123.3, requested approval must be submitted in advance of Race Week. The final decision on the adequacy of the number will rest with the Director of Competition.

123.5 Car identification – The PPAHCEM has the right to control the appearance of cars to distinguish one car from another.

124. Tow Rings / Hooks

124.1 – All race vehicles shall have an accessible and labeled tow ring/hook mounted on the front and rear of the vehicle. The tow ring/hook shall not be under the vehicle

124.2 – It is preferred that tow rings be made of a rigid, non-flammable, heat resistant material (cannot melt or deform due to extreme heat). There is a minimum of 1.5’’ ring size.

124.3 – Alternatively, FIA certified tow hooks are permitted. Tow Hooks must be located at least 12’’ from exhaust and will be subject to scrutineering.

124.4 - To avoid dragging, the tow ring/hook must be a minimum of 4’’ from the ground.

125. Throttle – All cars without Drive by Wire must be equipped with a self-closing throttle control with two return springs attached directly to the throttle shaft. There must also be a positive stop to prevent sticking in "over center" position.

125.1 – If the throttle actuating mechanism is the cable type, the cable must be encased to ensure push-pull action.

125.2 – The vehicle must be equipped with a safety toe strap (only applies to vehicles with mechanical throttle linkages) fastened to the accelerator pedal, which will allow the competitor to close the throttle manually by raising his/her foot. The toe strap must cover half the foot, guaranteeing positive action.

126. Firewall – A full firewall to provide a flame resistant barrier between the engine and the driver is required in all entries. It shall be constructed of approved fire retardant material or metal of at least twenty (20) gauge or equal material, unless preapproved by the Director of Completion or his designee, and must be installed between the engine compartment and the cockpit, and between the fuel cell and the cockpit.

127.1 – Rear engine cars will have an approved firewall between engine compartment and cockpit to the top of the driver's helmet.

128. Tires

128.1 – DOT and manufactured race tires are allowed.

128.1.1 – If grooving is done according to tire manufacturer's recommendations, grooving of tires is allowed unless prohibited in division regulations. Proof of tire manufacturer's recommendations may be requested / required by Race Director, Director of Competition, or the designee at any time.

128.2 – Unless prohibited by division regulations, the use of tire warmers is allowed. Use of tire warmers will be confined to assigned team pit areas and pit road only during a delay. Tire warmer blankets only (no generators or additional equipment) may be draped up to and including in the Staging Area but not at the Start Line. This will apply during all of Race Week in all sections and for all sessions. Cars must remain on the ground and no power source can be used and all additional equipment must remain in your assigned pit.

128.3 – Car Divisions - Vehicles are not to exceed 4 wheels and tires.

128.4 – All competitors will be required to also present tires (complete set of 4) at Technical Inspection that are appropriate for all possible weather conditions on Pikes Peak (including wet roads and cold temperatures) and have no sign of defects. At the discretion of the Director of Competition and/or Race Director, competitors may be required to use weather-appropriate tires during competition. If adequate tires are not presented, a competitor may be denied their run.

129. Transmission – Vehicles in all divisions must be equipped with transmissions/transaxles that allow the vehicle to back up and turn around under its own power.

129.1 - All vehicles must demonstrate a mechanical emergency neutral function with the vehicle powered off.

130. Exhaust – Exhaust systems are unrestricted but may be subject to decibel reading.

131. Electric Vehicle Specific Regulations

131.1 – Batteries

131.1.1 – Battery System: Batteries must be fully contained in enclosures that can be sealed by PPIHC Officials. Enclosures must be equipped with a forced ventilation system rated at least 10 cfm. It must operate whenever the battery system is electrically connected to the car. All electric cables must be properly sized to expected system currents. All electric vehicle entries must be accompanied by the MSDS information on all batteries that are considered hazardous or toxic. Failure to provide proper documentation will result in disqualification.

131.1.2 – Battery Disconnect: The battery system will be equipped with a manually operated, high-current switch to quickly disconnect the battery from the electrical system. This switch must be capable of interrupting the full load current. The switch must physically be located as near to the battery as practical and be operable from both the driver compartment and from outside the car. This switch must be clearly marked as the "Master Switch" and be plainly marked with "ON" and "OFF" positions.

131.1.3 – Main Fuse: A separate fuse (not a circuit breaker) will be placed in series with the main battery and the rating will not exceed 200% of the maximum expected current draw. All low voltage taps from the main battery will be separately fused. All fuses must be placed first in series with the battery starting at the positive connection.

131.1.4 – Electrical Shock Hazards: All exposed conductors operating at greater than thirty-six (36) volts must be properly insulated and marked with "High Voltage" warning signs.

131.1.5 – Covers and Shields: All revolving parts must be suitably covered to prevent accidental contact or injury should one or more of these parts break or malfunction. All steering linkage must be shielded from contact with the driver. If a flywheel is used it must be covered with an NHRA-approved scatter shield.

131.2 – Audio

128.2.1 – All electric powered entries must be fitted with an audio warning system that produces a constant audio warning at a minimum of 120 decibels as measured three (3’) feet (0.9144 m.) from the vehicle. Audio warning systems must be able to be activated only from outside the vehicle. **NO EXCEPTIONS**.

200 – UNLIMITED DIVISION

TECHNICAL REGULATIONS and SPECIAL RULES

Division	Class	Record Eligibility		Purse Eligibility	Award Eligibility
		Overall	Class		
Unlimited	Production Based	Yes	Yes	Yes	Yes
	Super Unlimited	Yes	Yes	Yes	Yes

The Unlimited Division is for highly modified, purpose-built or prototype vehicles. This division is where you will find competitors vying for the annual King of the Mountain title and the overall course record. With no limitations other than safety, builders put their imaginations to the test and produce vehicles specifically engineered to take on Pikes Peak.

The Director of Competition will determine the eligibility of a vehicle for the Unlimited Division.

This division will allow any race vehicle invited by PPIHC, and capable of challenging for the overall win, to take part in this Unlimited Division.

All vehicles must be race-ready and meet safety requirements as outlined in Technical Regulations and Special Rules and must adhere to General Competition Rules.

201 – Production Based Class

201.1 – The Production Based Class is for unibody, steel tube chassis, or body on frame vehicles.

201.2 – Vehicle appearance must be based on or inspired by a production vehicle. Subject to approval by Director of Competition and/or Race Director.

201.3 – Prototype and monocoque vehicles are not permitted.

201.3.1 – Monocoque vehicles that were produced as a consumer vehicle and maintain their OEM body may compete in the Production Based Class. Subject to approval by Director of Competition and/or Race Director.

202 – Super Unlimited Class

202.1 – The Super Unlimited Class is for prototype or monocoque vehicles.

300 – TIME ATTACK 1 DIVISION

TECHNICAL REGULATIONS and SPECIAL RULES

Division	Record Eligibility		Purse Eligibility	Award Eligibility
	Overall	Division		
Time Attack 1	Yes	Yes	Yes	Yes

The Time Attack 1 Division is for vehicles which maintain their original OVM configuration in terms of air/fuel delivery system, number of cylinders and AWD, RWD or FWD. Limited aerodynamic modifications may be made, but overall, this division is to put manufacturers and drivers head-to-head in vehicles that are more accessible to the general public.

The Director of Competition will have final authority on the eligibility of a vehicle for the Time Attack 1 Division.

This division is for production-based two-wheel and four-wheel drive vehicles.

Time Attack 1 vehicles must maintain their original OVM configuration as delivered as pertains to specifications for the air/fuel delivery system, number of cylinders, number of drive wheels and drive wheel location.

All vehicles must be race-ready and meet safety requirements as outlined in Technical Regulations and Special Rules and must adhere to General Competition Rules.

301. Vehicle Eligibility – It is the intent of these rules that vehicles competing in the Time Attack 1 Division be based upon a production vehicle available to the public and produced by a recognized manufacturer. Eligibility is restricted to closed-bodied four-wheel vehicles meeting the following requirements:

301.1 – Coupe, sedan, or wagon of no more than 5 doors.

301.2 – Cars must have come from the factory as either two-wheel drive (front or rear) or four-wheel drive.

301.3 – Unibody vehicles only, no tube frame or “body on frame” vehicles allowed.

301.4 – Aftermarket body panels, front and rear fascias and wings are permitted; make and model must remain recognizable.

301.5 – All body work must be securely latched or fastened.

301.6 – Windshield must be OVM or OVM replacement glass. Quarter and rear glass can be clear Lexan with a minimum thickness of 3mm and securely bolted in place or OVM glass. Door windows can be Lexan, OVM, OVM replacement glass or replaced with window nets and/or arm restraints. Reference rule 108 for open air vehicles.

301.7 – Cars must have headlights, brake lights and taillights in the OVM location.

301.8 – It is recommended that the vehicle has functioning windshield wipers.

301.9 – The total of all vertical planes/fins may not exceed 932 square inches (601289 sq. mm). Vertical side plates that come standard with any publicly available and marketed aftermarket rear spoiler count towards the 932 square inch rule.

301.10 – Aerodynamic devices and wings are allowed in the Time Attack 1 Division. Only single element wings are permitted in the division and no active aero is permitted. Wings that are installed must be no wider than the outside edge of the tires, front or rear, when the tires are pointed straight ahead. The furthest point of any front wing or device cannot extend more than twelve (12”) inches (304.8 mm) from the furthest point on the body on the front of the vehicle. The furthest point of any rear wing or device cannot extend more than twelve (12”) inches (304.8 mm) from the furthest point of the body on the rear of the vehicle. The highest point of any aerodynamic device or wing shall be limited to no more than 18 inches (457.2 mm) above the tallest point of the roof on the vehicle. Any questions regarding aerodynamic devices or wings should be directed to the Director of Competition prior to Technical Inspection.

302. Engine/Transmission – The engine must be derived from the original vehicle manufacturer (with documented manufacturer’s ID number). The engine is defined as the major fixed components consisting of the block and heads. Modifications to and including intake, exhaust and fuel delivery can only be upgraded from OVM as originally equipped. Transmissions are unrestricted.

302.1 – Engine and radiator catch tanks with a minimum capacity of one (1) quart (0.946 liter) each are required and must be securely fastened.

303. Chassis/Suspension

303.1 – Suspension points may be relocated no more than one (1) inch (25.4 mm) from the original mounting point center line.

303.2 – Modification of steering components is unrestricted.

303.3 – OVM suspension design type must remain.

304. Fuel/Fuel System – Modifications to the Fuel/Fuel System can only be upgraded from OVM as originally equipped. No additional fuel/air injection/porting for combustion from the original design is allowed. Fuel lines and fittings must be high pressure type and routed in such a way

that they do not interfere with moving parts, they are securely insulated and are attached to the unibody/chassis

304.1 – Vehicles competing in this division are prohibited from using Methanol.

305. Electrical System – See Car Safety and Construction

306. Exhaust System – Modifications to the exhaust system can only be upgraded from OVM as originally equipped.

307. Brake System

307.1 – Brake system must operate all four (4) wheels.

307.2 – Brake calipers, lines, rotors, and pedals must be in good working order.

307.3 – Dual master cylinder pedal assemblies are allowed.

307.4 – Brake bias may be driver adjustable.

308. Interior

308.1 – All non-essential flammable materials must be removed.

308.2 – Gauges and instrument panel are unrestricted.

309. Roll Cages – The Director of Competition has the authority to approve any roll cage system which meets or exceeds the intent of the rules. Any roll cage that does not meet the minimum weight per material specifications defined in the chart shown in 105.2 and/or has a certification that is not recognized by the PPIHC, must be accompanied by documentation during the Request for Invitation process.

310. Bolt-In Roll Cage – Removable roll cages and braces shall be very carefully designed and constructed to be at least as strong as a permanent installation. If one tube fits inside another tube to facilitate removal, the removable portion shall fit tightly and shall bottom, by design, and at least two (2) bolts shall be used to secure each such joint. The telescope section shall be at least eight (8”) inches (203.2 mm) in length. Minimum bolt diameter is 3/8” inches (9.525 mm).

311. Main Roll Hoop – Main roll hoop (behind the driver) shall extend the full width of the driver/passenger compartment and shall be as near the roof as possible. It shall incorporate a diagonal lateral brace to prevent lateral distortion of the hoop. Any number of additional reinforcing bars is permitted within the structure of the cage. It is required that the horizontal brace behind the driver's seat continue from the diagonal to the passenger side main hoop upright or that a second diagonal be installed in the main hoop.

312. Front Roll Hoops

312.1 – The front or side hoops shall follow the line of the front pillars to the top of the windshield (as close to the roof as possible) then horizontally to the rear, attaching to the

main hoop. These two side hoops are to be connected together by a tube over the top of the windshield.

312.2 – A front hoop following the line of the front pillars and connected by horizontal bars to the main hoop on each side at the top may be used, or a top "halo" hoop following the roof line from the main hoop to the windshield with forward down tubes following the line of the front pillars to the floor.

312.3 – The front or side hoops may extend through the dash pad. This includes the forward part of the door panel if it is an extension of the dash panel.

312.4 – One (1) bar is recommended in a horizontal plane between forward cage braces in the dash area.

313. Bracing – The main roll hoop shall have two braces extending to the rear attaching to the frame or chassis. Braces shall be attached as near as possible to the top of the main hoop not more than six (6”) inches (152.4 mm) below the top and at an included angle of at least thirty (30) degrees. On cars where the rear window/bulkhead prohibits the installation of rear braces (e.g., Honda del Sol), the main hoop shall be attached to the body by plates welded to the cage and bolted to the stock shoulder harness mounting points.

314. Side Protection – Two side tubes connecting the front and rear hoops across the driver's door opening and across the passenger's door opening are mandatory. The telescope sections should be at least four (4”) inches (101.6 mm) in length. Minimum bolt diameter is 3/8 inches (9.525 mm). The driver's window safety net may be mounted to this side tube and the top cage tube. Driver's door side tubes may extend into the door. The door bars may run parallel, or in the shape of an “X”. If the two door bars do not intersect as they do when forming an “X”, a minimum of two vertical tube sections shall connect the upper and lower door bars. NASCAR-style side protection is permitted.

The driver's door, window operating mechanism, inner door trim panel, armrest, map pockets, and inside door latch/lock operating mechanism may be removed and the inner door structural panel may be modified, but not removed, to facilitate this type of side protection. The stock outside door latch/lock operating mechanism shall not be removed or modified. Cars without OVM side impact beams must have 2 driver's side tubes in X position or NASCAR-style protection.

315. Mounting Plates – See Car Safety and Construction

316. Hardware (Bolts) – See Car Safety and Construction

400 – PIKES PEAK GT4 DIVISION

TECHNICAL REGULATIONS and SPECIAL RULES

Division	Classes	Record Eligibility			Purse Eligibility	Award Eligibility
		Overall	Class	Previous Class Record (if outlined in the Rule Book)		
Pikes Peak GT4	Turbo	Yes	Yes	N/A	Yes	Yes
	Normally Aspirated (NA)	Yes	Yes	N/A	Yes	Yes

The Pikes Peak GT4 Division is reserved for manufacturers that have formed partnerships with the PPIHC.

The Race Director, Executive Director and/or Board of Directors will determine the eligibility of a vehicle for the Pikes Peak GT4 Division.

All vehicles must be race-ready and meet safety requirements as outlined in Technical Regulations and Special Rules and must adhere to General Competition Rules.

401. Definitions

401.1 Bodywork – Must remain original per the manufacturers homologation. Where an Evo kit has been approved by the manufacturer, if used IT MUST be run in its ENTIRETY. GT4 competitors may not mix and match alternatives where applicable under the same homologation No.

401.2 Original – As fitted to the SRO Motorsports Group-approved series-produced car and in compliance with their Technical Form.

401.3 Event – An event shall consist of official practice(s) and the race(s).

401.4 Weight – Is the weight of the car without the driver at any time during the event and its eventual ballast.

401.5 Racing weight – Is the weight of the car in running order with the driver aboard and the quantity of fuel in its tank.

401.6 Wheel – Wheel: Flange and rim. Complete wheel: Flange, rim and tire.

401.7 Cockpit – Closed car: The interior volume of the main structure which is reserved for the occupants. Its limits are defined by the roof, the floor, the doors, the lateral parts, the glazed parts and the front and rear bulkheads.
Open car: The cockpit opening must be symmetrical as viewed from above, and nothing is permitted to cover it except for a hood or a hard-top.

401.8 Supercharging – Increasing the weight of the charge of the fuel/air mixture in the combustion chamber (over the weight induced by normal atmospheric pressure, ram effect and dynamic effects in the intake and/or exhaust system) by any means whatsoever. The injection of fuel under pressure is not considered to be supercharging.

401.9 Semi-automatic gearbox – One which, when the driver calls for a gear change, takes over the control of one or more of the engine, clutch and gear selectors momentarily to enable the gear to be engaged. Homologated ratios, Final Drives and gear shift programs may not be altered for this event

401.10 Location – A site defined relative to the original: center line of the car, axles center (middle of the wheelbase on the center line), cockpit, luggage compartment and engine compartment. Location within the engine compartment is a site defined relative to the crank case and cylinder head(s).

401.11 Position – The site defined by dimensions from the original vehicle data, e.g. axles center and center line of the car.

401.12 Orientation – Is the relationship of the component to the longitudinal and transversal axes of the vehicle. If the component is turned 180°, this will be regarded as a change in orientation.

401.13 Telemetry – The transmission of data between a moving car and anyone connected with the entry of that car.

401.14 Technical Form – All cars approved by SRO Motorsports Group will be the subject of a descriptive form called Technical Form issued by the RACB on which shall be entered all data enabling identification of the said model The presentation of the forms at scrutineering and/or at the start may be required by the organizers who will be entitled to refuse the participation of the entrant in the event in case of non-presentation.

The form presented must imperatively be printed on "RACB stamped" paper, signed by the SRO GT4 Bureau and be joined with a SRO Technical Department certificate on which the chassis number and owner of the car are mentioned.

The form presented must imperatively be printed on "RACB stamped" paper and signed by the SRO GT4 Bureau

Should the date for the coming into force of a Technical Form fall during an event, this form will be valid for that event throughout the duration of the said event.

In case of any doubt remaining after the checking of a model of car against its Technical Form, the scrutineers should refer either to the maintenance booklet published for the use of the make's distributors or to the general catalogue in which are listed all spare parts.

In case of lack of sufficient accurate documentation, scrutineers may carry out direct scrutineering by comparison with an identical part available from a concessionaire.

It will be up to the competitor to obtain the Technical Form concerning his car from the SRO GT4 Bureau.

402. Regulations

402.1 Role of the SRO – The following technical regulations for the Pikes Peak Division Cars are issued by SRO Motorsports Group and the PPIHC.

402.2 Vehicle type eligibility – Vehicles will be eligible in the Pikes Peak GT4 Division. For a vehicle to be eligible in the Pikes Peak GT4 Division, it must be a car approved by the PPIHC Selection Committee and homologated by the RACB in GT4.

402.3 Eligible cars – The list of approved cars will be published by the PPIHC.

402.4 Regulation and eligibility amendments – PPIHC will publish any changes made to these regulations. All such changes will come into effect after their publication. Changes for safety reasons may be made without notice.

402.5 Compliance with the regulations – The car entered by a competitor must conform strictly to its Technical Form, to this regulation, to safety prescription of art277 of appendix J of the FIA, to the official BOP Chart established for the relevant competition as well as to any additional notification from the SRO GT4 Bureau.

It is the duty of each competitor to satisfy the Scrutineers and the Stewards of the Meeting that his car complies with these regulations in their entirety at all times during an event.

A car, the construction of which is deemed to be dangerous, may be excluded by the Stewards of the meeting.

402.6 Measurements – All measurements must be taken while the car is stationary on a flat horizontal surface or as stated in the Sporting Regulations or supplementary regulation of the relevant Series.

Before the start of an Event, the scrutineers stipulate the place where the ride height and weights will be checked. It’s the competitor’s responsibility to inform themself about this place.

The competitor has the possibility, during the time set up by the organizer, to ensure the conformity of his car by using the official control equipment, at the official place of scrutineering.

402.7 Material – Titanium is not permitted unless used in the original part or explicitly authorized by these regulations. The use of a material which has a specific yield

modulus greater than 40 GPa/g/cm^3 is forbidden for the making of all parts that are free or homologated as an Option Variant.

This restriction does not concern the parts homologated with the standard vehicle.
The use of magnesium sheet less than 3 mm thick is forbidden.

402.8 Data logging – The car may be fitted with a SRO data logging system. SRO Motorsports Group/PPIHC may ask competitors to add extra sensors to provide additional data.

The data thus collected must remain at the disposal of the SRO GT4 Bureau/PPIHC which is used for scrutineering and the GT4 Series organization for driving conduct during the races and practices. The competitor is responsible for the good functioning of this system.

The Technical Delegate can be assisted by technicians specialized in electronic systems in order to ensure the correct operation and the conformity of the readings of the SRO data logging system and the conformity of the various systems with which the cars are equipped.

They may at any moment remove, exchange or control the various electronic components of a car and draw up a report to the Technical Delegate on their investigations, and they reserve the right to keep the components they have removed for later analysis.

No protest will be accepted concerning these controls and removed components. If a case of non- conformity is noted (either during or after the Event), the customary procedures will apply (a report will be drawn up by the Technical Delegate on approval of the Chief Scrutineer and forwarded to the Panel of Stewards for a decision).

The SRO-approved data logger must work throughout the Event, including during every practice, and controls may be carried out at any time. Competitors cannot leave the event before their data loggers have been downloaded or unless the stewards have given their consent for them to leave.

Any car whose performance is outside the window of performance specified for that car as measured in testing, and in historical data can be impounded or have its balance of performance modified during the event.

402.9 Telemetry – The use of telemetry is forbidden. In-car camera(s) and/or telemetry that is livestreamed must be purchased from or approved by PPIHC. See definitions for telemetry vs. data acquisition.

403. Bodywork

403.1 Bodywork – All bodywork dimensions and shape must remain original, as homologated by the Manufacturer. Any non-movable element must be attached with the use of tools.

The front and rear overhangs must remain original.

Material used for the bonnet and boot lids, bumpers, doors and wings must remain original or as described on the technical form of the car. Where an element is replaced, it must be attached in a way which is at least as strong as the original method and any non-moveable element must be attached with the use of tools.

The blanking of air inlets is permitted. Blanking devices must be firmly secured and must neither protrude beyond the surface of the bodywork nor modify the homologated parts (tape permitted).

403.1.1 Bonnet and boot lids – They must have at least two safety fasteners, both of which are clearly indicated by red (or contrasting color) arrows.

It must be possible to remove or open them without the use of tools. A waiver by the SRO Technical Department can be given for special constructions. These constructions must be described in the homologation document.

403.1.2 All bodywork joints in the vicinity of the refueling connections must be designed in such a way as to prevent any leakage of fuel into the engine compartment and/or cockpit during refueling.

403.2 Windscreen and windows – In order to protect the windscreen, the addition of a maximum of 4 translucent films on its external face is permitted.

Additional fastenings may be used for securing the windscreen. The side and rear windows may be replaced with polycarbonate.

Onto the inside surface of the side windows in glass, a colorless and translucent anti-shatter film (such as SL Lumar Safety Film/D1570) of 0.1 mm maximum must be installed, in order to guarantee an appropriate protection in case of splintering.

<u>Cockpit ventilation:</u>

In order to extract air from the cockpit, the rear window may have a maximum of 5 circular holes with a maximum diameter of 50 mm each.

A cut-out of a maximum surface of 25 cm^2 is authorized in each rear view mirror.

A scoop may be fitted to each door window, provided that it complies with the following points:

- It must not exceed the perimeter of the window, must have a maximum height of 150 mm and must not protrude more than 50 mm over the window's surface.
- It must be made from the same material as the window or from translucent polycarbonate if the window is made from glass and must be able to be closed by a shutter made from the same material as the window.
- It must not obstruct the driver's rearward view.

Air ducts fed by the scoops are authorized inside the cockpit on condition that they reduce neither the visibility nor the safety of the driver.

Each rear side window may be partly opened to a maximum of 30 mm at its rear extremity, or may have a circular opening with a maximum diameter of 50 mm

Protective nets:

a) Net: A protective net is compulsory if the car is not equipped with racing net complying with art 14.7. It must meet the following specifications:
   - the net must be made up of woven strips at least 19 mm (3/4") wide;
   - the meshes must be a minimum of 25 x 25 mm and a maximum of 60 x 60 mm. The woven strips must be non-flammable and sewn together at each point of crossing. The net must not be of a temporary nature.
   - viewed from the side, it must reach from the center of the steering wheel to the B-pillar.

b) Fixation: The net must be attached either to the safety cage or to a fixed part of the bodywork, above the driver's window, by means of a rapid release system that will function even if the car turns over. It must be possible to detach the net with one hand. To this end, the handle or lever must have colored markings ("dayglo" orange).

   A push-button release system is authorized provided that it respects the prescriptions of this article. The push-buttons must be visible from the outside, be of a contrasting color and be marked "press".

403.3 Door protection – The removal of door soundproofing material is allowed with no other modification.

For cars homologated in GT4 after the 01/01/2016, Installation of foam to protect against lateral collisions homologated in VO is mandatory.

For cars homologated before 01/01/2016 - Doors on driver's side :

The removal of the side protection bar is permitted but then the inside of the doors must be filled with energy-absorbing material (Impaxx 300) and a side protection panel made of composite material is mandatory for the driver's door and must be homologated. This applies also when the original door is replaced by a door made of another material.

It must comply with Drawing 255-14 and be secured to the safety cage or to the bodyshell, and its minimum height must extend from the bottom of the door to the maximum height of the door crossbar. If the rearmost point of the driver's shoulders is rearward of the B-pillar, the side protection panel is compulsory up to that point on the rear door as well, and it must be secured to the safety cage or to the bodyshell.

de carbone 280g

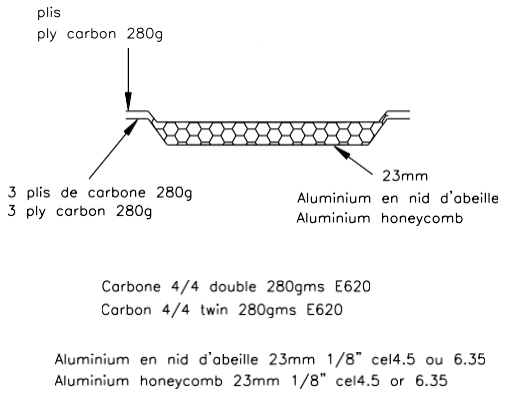

403.4 – Aerodynamic devices

The PPIHC reserves the right to adjust the characteristics of the homologated aerodynamic devices in order to maintain the balance of performance between cars.

404. Weight

404.1 Minimum weight – The PPIHC reserves the right to adjust the minimum weight of any car in order to maintain the balance of performance between the cars. The minimum weight must be respected at all times during the event, in particular when the car crosses the finish line. It is permitted to complete the weight of the car by one or several units of ballast.

404.2 Ballast – Ballast must be secured according to the specifications of Article 253-16 concerning the dimensions and characteristics of the fixations. The securing system must allow seals to be affixed to the ballast by the scrutineers and must be designed such that tools are required for its removal. Any movable ballast system when the car is in motion is forbidden. The Director of Competition or designee may permit the addition of fuel as ballast. This will be a maximum of 10 gallons and requires a waiver BEFORE official Qualifying or on the day of the event.

404.3 Levelling Ballast / Crew handicap / Success Ballast – The levelling ballast and/or crew handicap and/or Success Ballast (only the weight of the stacking metallic plates) must, in addition to the requirements of Article 4.2, comply with the following points:

- It must be made from stacking metallic plates according to Drawing n° 257A-1
- The plates must be firmly attached inside a housing by means of 5 M12 screws.
- The height of the stacking plates is limited at 15 cm.
- This ballast must be secured in the cockpit in the passenger's location.

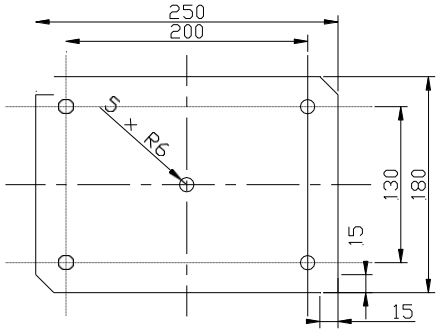

257A-1

404.4 Adding during the race – The adding to the car during the race of any solid material whatsoever, and the replacement during the race of any part of the car with another which is materially heavier, are forbidden.

404.5 Liquids – The weight may be checked at any time during the event with the quantity of liquids remaining in the tanks, except after the race when the car may be emptied of all the fuel before weighing.

405. Engine

405.1 Engine control unit – The Technical Delegate may at any time oblige the competitor to use the reference unit registered with the SRO Motorsports Group by the Manufacturer or Tuner.

405.2 Intake system

405.2.1 The intake system is defined by the assembly comprising the restrictor(s) (if applicable) and the manifold up to the intake ports on the cylinder head(s).

405.2.2 All the air feeding the engine must pass through the homologated air restrictors (if applicable), and no pipe containing air is permitted to enter or to exit from the intake system.

The restrictor(s) must be made of metal or metal alloy, 3 mm long and must be entirely visible once the bonnet is open and without dismounting any element or cover.

Sealing the restrictors must cause the engine to stop immediately.

This check must be carried out at an engine speed of 2500 rpm, the pressure sensors present inside the intake system being disconnected.

405.2.3 The depression measured in the intake system when the engine stops must be at least equal to the atmospheric pressure in the place where the check is carried out minus 150 millibar, maintained during at least 0.5 seconds.

405.2.4 The SRO GT4 Bureau reserves the right to adjust the diameter of these air restrictors (if applicable) in order to maintain the balance of performance between the cars.

405.3 Exhaust

405.3.1 The exhaust system must incorporate one or more homologated catalytic converters, which should be functioning at all times and through which all exhaust gases should pass.

405.3.2 The noise generated by the car must not exceed 110 dB (A) at 3800 rpm, or at three-quarter maximum revs if this is less.

This measurement will be taken at a distance of 0.5 m and at a 45 degree angle to the point of exit of the exhaust.

All measures taken to ensure that the maximum noise limits are not exceeded must be permanent in nature, and must not be cancelled out by the exhaust gas pressure.

Exhaust gas may only exit at the end of the system.

Parts of the chassis must not be used to evacuate exhaust gases. Exhaust line protection are allowed.

406. Fuel System

406.1 Fuel capacity – The PPIHC reserves the right to adjust the capacity of the fuel tank in order to maintain the balance of performance between the cars.

406.2 Fuel tanks – All fuel tanks must be rubber bladders conforming to or exceeding the specifications of FIA/FT3 1999 and must comply with the prescriptions of Article 253-14. They must be placed in the original location or in the luggage compartment.

All fuel lines must comply with the specifications of Article 253-3.

It is recommended that the tank be filled with MIL-B-83054, SAE-AIR-4170 (MIL-F87260 recommended in case of quick refueling) type safety foam.

Any fuel fitting which is part of the tank walls (air vents, inlets, outlets, tank fillers, inter tank connectors and access openings) must be made of metal or composite and bonded into the fuel tank.

The fuel tank must be contained in a flameproof and liquid-proof housing that has no other mechanical function.

This housing must include a crushable structure** on all surfaces, unless positioned within and protected by the main structure/chassis.

The bottom part of the housing may be made of the flat bottom, provided that it complies with the specifications of the crushable structure[1].

** Crushable structure: Sandwich construction with a minimum thickness of 10 mm, made of a core (minimum crushing strength of 18N/cm2) and of two skins of 1.5 mm minimum thickness (minimum tensile strength of 225N/mm2). Composite material authorized.

406.3 Fuel samples – All cars must be fitted with a self-sealing connector which can be used by the Scrutineers to obtain samples of the fuel feeding the engine. This connector must be of the type approved by the FIA.

407. Lubrication System

407.1 Catch tank – When a car's lubrication system includes an open type sump breather, it must vent into a catch tank of at least 3 liters capacity fitted with a visible level gauge.

408. Electrical Equipment

408.1 Battery – Batteries may be situated in the cockpit but without obstructing the exit of the driver. Batteries must be securely fixed to the body shell and completely surrounded by a box made of insulating material that includes an air vent which exits outside the cockpit.

If the battery situated in the cockpit is a dry battery, it must be protected electrically by a cover which covers it completely. The attachment to the body shell must consist of a metal seat and two metal clamps, with an insulating covering, fixed to the floor by bolts and nuts.

For attaching these clamps, bolts with a diameter of at least 10 mm must be used, and under each bolt, a counter plate at least 3 mm thick and with a surface of at least 20 cm^2 beneath the metal of the bodywork (see Drawings 255-10 and 255-11).

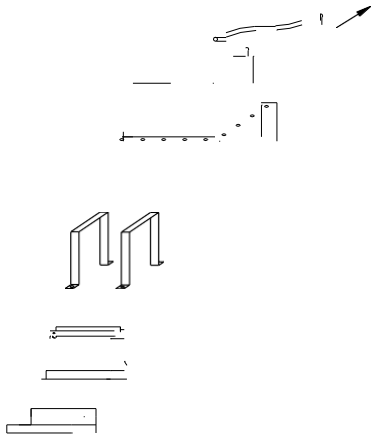

255-10

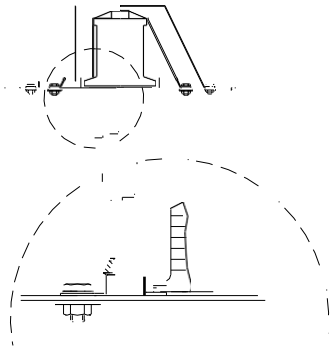

255-11

408.2 Windscreen wiper – The car must be fitted with a windscreen wiper system, which must be in working order throughout the event.

Only the blades may be replaced.

The capacity of the windscreen washer tank may be modified.

408.3 Starting – A starter must be fitted and be in working order at all times during an event. The driver must also be able to operate the starter when seated normally.

408.4 – Lighting equipment

408.4.1 All lighting equipment must be in working order throughout the event.

408.4.2 The exterior lighting equipment must at least ensure the following functions : Headlights, direction indicators, stop lights, rain light

(see 8.4.4) and rear sidelights. For safety reasons, it is obligatory for headlights to produce a white beam. For races run in the daytime, GT4 cars must be equipped with white headlight covers. These must not create any aerodynamic downforce.

408.4.3 Reversing lights: The bulbs of the reversing lights must be removed.

409. Transmission

409.1 Transmission system – For cars fitted with a semi-automatic or automatic gearbox and with 6 ratios or more, and/or a power- driven clutch with electronic or pneumatic control, a waiver of the SRO GT4 Bureau can eventually be granted. By this the Technical Delegate may, at any time oblige, the competitor to use the reference unit(s) registered with the SRO Motorsports Group by the manufacturer or tuner. Homologated ratios, Final Drives and gear shift programs may not be altered for this event

For safety reasons, the transmission must be designed in such a way that if the car is stopped and the engine is stalled, it is possible to push or tow it.

If needed, a protection for gearbox components can be authorized, after approval by the SRO GT4 Bureau.

409.2 Reverse gear – All cars must have a reverse gear which, at any time during the event, can be selected while the engine is running and be used by the driver when seated normally.

410. Axels, Suspension and Steering

410.1 Ride height – The PPIHC reserves the right to adjust the ride height in order to maintain the balance of performance between the cars.

For the checking of the ride height, the pressure of the tires must not be less than 1.5 bars. If the pressure is less than 1.5 bars when scrutineering, the pressure may be raised to maximum 1.5 bars.

410.2 Suspension type and mounting

410.2.1 All suspension components, with the exception of parts specifically mentioned below must be original equipment supplied by the manufacturer and comply with the Technical Form.

410.2.2 The position of the suspension and the steering box (rack or other) anchorage points on the chassis must be as original.

410.2.3 The addition of an anti-roll bar (adjustable or not) in the front as in the rear is permitted. Those will be mentioned in the Technical Form.

410.2.4 Shock absorbers are mentioned in the Technical Form and must comply with it. The working principle (adjustable (maximum 2 ways) or not) is free. A maximum of 3 front springs and 3 rear springs can be homologated.

For cars homologated before 01/01/2022, front and rear springs from different set can be mixed with other springs from the items listed in the homologation. The shock absorber reservoir and its possible line must be completely isolated from the cockpit or covered and may not be located in a compartment giving access to the ventilation system of the car. No electrical, hydraulic or pneumatic connection between the shock absorbers is permitted.

The modification of spring, shock absorber and anti-roll bars adjustments from the cockpit is prohibited.

410.3 Steering – Steering Column : Adjusting system authorized, anti-theft device (steering lock) forbidden.

The steering wheel may be fitted with a quick release system.

The quick release mechanism may consist of a flange concentric to the steering wheel axis, colored yellow through anodizing or any other durable yellow coating, and installed on the steering column behind the steering wheel. The release must be operated by pulling the flange along the steering wheel axis.

410.4 Power steering – For cars fitted with an automatically variable power steering, the Technical Delegate may at any time oblige the competitor to use the reference unit registered with the SRO Motorsports Group by the manufacturer or tuner.

411. Brakes

411.1 Hydraulic circuits and tanks – The complete braking system must incorporate at least two separate circuits operated by the same pedal.

This system must be designed so that if leakage or failure occurs in one circuit, the pedal shall still operate the brakes on at least two wheels.

The brake fluid tanks may be fixed inside the cockpit, on condition that they are securely fastened and protected.

The balance of the braking forces between the front and rear axles may (if homologated) be adjusted by the driver, through:

- a direct and manual intervention on a mechanical system allowing the modification of the position of the centre of the joint, on the linkage lever of the hydraulic pumps of the front and rear circuits, mounted on the original pedal unit.
- a direct and manual intervention on a proportional valve, in which the intake pressure of the rear circuit is adjusted through a pre-loaded spring, variable according to the position of the manual linkage system (see the Drawing of the principle 263-9).

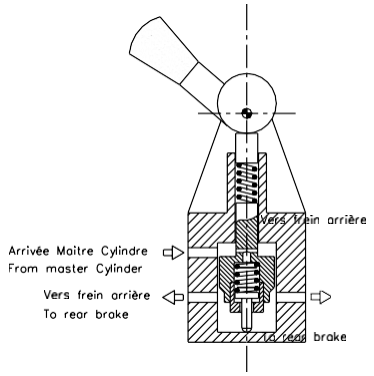

263-9

Only one of these two systems is permitted.

411.2 Anti-lock braking and power braking – For cars fitted with anti-lock and/or automatically variable power braking systems, the Technical Delegate may at any time oblige the competitor to use the reference unit registered with the SRO Motorsports Group by the manufacturer or tuner.

411.3 Cooling of brakes – Only one flexible pipe to bring the air to the brakes of each wheel is allowed, but its inside section must be able to fit into a circle with a 10 cm diameter.

This pipe may be doubled, but in that case the inside section of each pipe must be able to fit into a circle with a 76 mm (3”) diameter.

The air pipes must not go beyond the perimeter of the car, seen from above.

412. Wheels and Tires

412.1 Dimensions and materials – The PPIHC reserves the right to adjust the width of the complete wheels in order to maintain the balance of performance between the cars.

Measurements will be taken horizontally at axle center line height. Forged magnesium wheels are forbidden.

412.2 Wheel visibility – With the front wheels aligned to proceed straight ahead, the bodywork must project over the wheels in such a way as to cover efficiently at least one third of their circumference and at least the entire width of the tire.

412.3 Wheel attachment – Wheel attachment principle must remain original.

Wheels fixations by bolts may be changed to fixations by pins and nuts provided that the number of attachment points and the diameter of the threaded parts as indicated on Drawing 254-1 are respected.

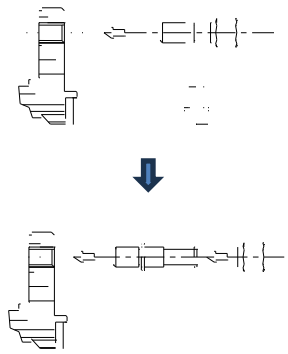

254-1

The wheel nuts may be changed, provided that their material remains ferrous.

Alternatively, another method of retaining the wheels attachment system may be used provided it has been approved and homologated.

Air extractors added on the wheels are forbidden.

412.4 Pressure control valves – Pressure control valves on the wheels are forbidden.

412.5 Sensors – Sensors for measuring the pressure and the temperature of the tires when the car is in motion are strongly recommended.

If these sensors are used, there must be at least one warning light to notify the driver of a probable failure.

412.6 Pneumatic jacks – Pneumatic jacks are recommended and may be attached to the safety cage, but compressed air bottles are not to be carried on board.

Minimum openings allowing the use of air jacks are authorized

The bodywork may be modified over a maximum area of 100 cm^2 as to create a housing for this connector.

412.7 Tires – There may be a specific tire for the Pikes Peak GT4 Division. Grooving or modification of the compound by any method is prohibited. Tire warmers/heaters are prohibited.

413. Cockpit

413.1 Equipment permitted in the cockpit

413.1.1 The only components which can be added in the cockpit are:

- Safety equipment and structures
- Tool kit
- Seat, instruments and any other controls necessary for driving including the brake power distributor switch
- Electronic and electrical equipment
- Driver cooling system
- Ballast
- Pneumatic jacks and their pipes
- Battery
- Driver ventilation equipment
- O2

413.1.2 None of the above items may hinder cockpit exit or the driver's visibility.

413.1.3 The above components must be covered where necessary by a rigid protective material to minimize injury, and their mountings must be able to withstand 25 G deceleration.

413.2 Cockpit exit time – The driver, seated in his normal driving position, must be able to get out from the cockpit in 7 seconds through the driver's door and in 9 seconds through the passenger's door.
For the purposes of these tests, the driver must be wearing all normal driving equipment, the seat belts must be fastened, the steering wheel must be in place in the most inconvenient position, and the doors must be closed.

413.3 Test for helmet removal – With the driver seated in his normal driving position in the car with which he/she is entered, wearing a cervical collar appropriate to his/her size and with the seat harness tightened, a member of the medical service must demonstrate that the helmet which the driver will wear in the race can be removed from his head without bending his neck or spinal column.

414. Safety Equipment

414.1 Fire Equipment – All vehicles must comply with the Fire Equipment Rules outlined in Section 112.

414.2 Safety belts – Safety harnesses in compliance with FIA Standard 8853-2016 (Technical List n°57) are mandatory.

The wearing of two shoulder straps, two lap straps and two crotch straps is compulsory. It must have a minimum of five (5) anchorage points.

The harness must be installed and used in accordance with FIA Article 253-6 of Appendix J. Elastic devices attached to the shoulder straps are forbidden.

It is prohibited for the seat belts to be anchored to the seats or their supports.

414.3 Seats and headrest – The driver's seat must be homologated by the FIA and not modified.

It must be installed and used in accordance with Article 253-16 of FIA Appendix J.

If the seat is part of a safety structure approved by the FIA, seat and headrest will be defined in the homologation form.

Energy-absorbing and non-flammable material must be situated around the driver's head.

If a foam insert is used between the homologated seat and the driver, minimum lateral support to the driver's head, shoulders and pelvis must be guaranteed as follows:

- 230mm min. at seat-side-head support along the head-plane.
- 180mm min. at seat-side-shoulder support along the shoulder-plane.
- 100mm min. in height at seat-side-pelvis support along the pelvis-plane over a length of 200mm min.

This requirement must be verified using a parallelepiped template of dimensions X 200 x Y 150 x Z 100 mm.

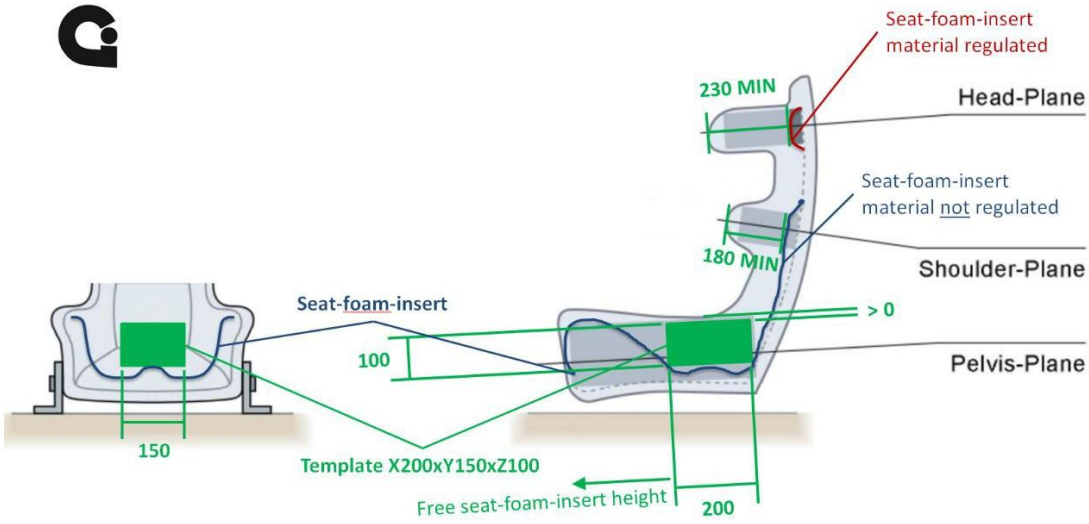

If the original attachments or supports are changed, they must comply with the provisions of article 253- 16.

414.4 Master switch – The driver, when seated normally with the safety belt fastened and the steering wheel in place, must be able to cut off all the electrical circuits and stop the engine by means of a spark-proof master switch.

This switch must be clearly marked by a symbol showing a red spark in a white-edged blue triangle and be accessible by the driver with his safety belt fastened.

There must also be an exterior switch, which is capable of being operated from a distance. This switch must be located at the lower part of the windscreen pillar.

414.5 Towing eyes – All cars will be equipped with a rear and front towing device for all events. It will be clearly visible and painted in yellow, red or orange.

It must allow the passage of a cylinder with a diameter of 60 mm (2.37’’). This supersedes the 1.5’’ in general PPIHC regulations.

It must allow the car to be towed on a dry surface (concrete or asphalt), by applying traction on a plane parallel to the ground, with an angle of plus or minus 15 degrees to the longitudinal centerline of the car.

This check, which may take place during preliminary scrutineering, must be carried out with the wheels blocked by means of the main braking system.

The car must be fitted with tires of a type identical to that used during the event.

414.5 Racing nets – They are not compulsory. If fitted, they must be homologated according to FIA 8863-2013 standard (FIA Technical List n°48). They must be attached to the homologated mounting points (see the homologation form of the car) and must be installed in accordance with the installation specifications published by the FIA. Quick release systems of both

nets must be able to be opened by both the driver when seated in racing position with tightened seat-belts as well as by rescue crews.

415. Safety Structures

415.1 Safety cage – The safety cage must have no more than six mounting points, except if supplementary mounting points become necessary because of the use of the reinforcements allowed by the SRO GT4 Bureau. The safety cage must be certified or homologated by an ASN or homologated by the FIA.

For cars homologated in GT4 after the 01/01/2016, the cage used must be defined in VO.

An authentic copy of the homologation document or certificate, approved by the ASN and signed by qualified technicians representing the manufacturer, must be presented to the event's scrutineers.

<u>Protective padding</u>

Protective padding must be fitted in accordance to appendix J art 253-8.3.

The padding must comply with FIA standard 8857-2001, type A (see technical list n°23 "Roll Cage Padding Homologated by the FIA").

416. Fuel

416.1 Fuel specification – There may be a spec fuel for the Pikes Peak GT4 Division.

416.2 Air – Only air may be mixed with the fuel as an oxidant.

417. Inboard Camera

417.1 An inboard camera system homologated by the GT4 Series organization is permitted, but not mandatory.

If used, the installation of this system must be made in strict accordance with the corresponding instructions. All competitors are themselves responsible for obtaining the system, for the correct installation and the correct functioning thereof.

500 – OPEN WHEEL DIVISION

TECHNICAL REGULATIONS and SPECIAL RULES

Division	Record Eligibility		Purse Eligibility	Award Eligibility
	Overall	Division		
Open Wheel	Yes	Yes	Yes	Yes

The only division to compete in the Pikes Peak Hill Climb since its inaugural race in1916, the Open Wheel division is a true mountain staple. Open wheel vehicles are limited in weight by engine size, placement and design, but internal modifications are nearly limitless.

The Director of Competition will have final authority on the eligibility of a vehicle for the Open Wheel Division.

All vehicles must be race-ready and meet safety requirements as outlined in Technical Regulations and Special Rules and must adhere to General Competition Rules.

501. Design & Construction – All phases of design and construction of any vehicle are subject to the approval of the Director of Competition.

501.1 – Vehicle Eligibility: Single engine, open wheeled, open cockpit, single seat vehicles of front or rear engine design.

501.2 – Vehicles may be two (2) wheel drive or four (4) wheel drive. Four (4) wheel steering is permitted.

501.3 – A vehicle must have a complete body and be externally skinned.

501.4 – All vehicles must have as much engine cover as practical.

501.5 – All monocoque vehicles are required to have wheel and suspension tethers. Subject to approval by the Director of Competition.

502. Engine Eligibility – The following limitations shall govern the various engine sizes that may be used in vehicles:

502.1 – Engines shall be of the internal combustion, reciprocating piston type. Production-derived overhead camshaft and/or push rod operated valve mechanisms turbocharged / supercharged engines.

502.2 – Two Cycle Engines: Maximum 97.638 C.I.D. (1600 cc).

502.3 – Rotary Engines: Maximum 80 C.I.D. (1300 cc)

502.4 – Any other type of engine specification must be submitted to the Director of Competition for approval prior to use in any racing event.

502.5 – Competitors running in the Open Wheel Division will be required to weigh in at a location to be determined before the first day of practice. The scales will remain in the same location all week. The vehicle must meet the weight per cubic inch or minimum weight as stated in section 503.

503. Size/Weight Limit

503.1 – Non-turbocharged / non-supercharged two-wheel drive front engine vehicles must weigh at least three (3) pounds per C.I.D.

503.2 – Non-turbocharged / non-supercharged two-wheel drive rear engine vehicles must weigh at least four (4) pounds per C.I.D.

503.3 – Non-turbocharged / non-supercharged four-wheel drive vehicles must weigh at least four and one half (4.5) pounds per C.I.D.

503.4 – Turbocharged / supercharged two-wheel drive front engine vehicles must weigh at least seven (7) pounds per C.I.D.

503.5 – Turbocharged / supercharged two-wheel drive rear engine vehicles must weigh at least eight (8) pounds per C.I.D.

503.6 – Turbocharged / supercharged four-wheel drive vehicles must weigh at least nine (9) pounds per C.I.D.

503.7 – All overhead camshaft engines except turbocharged/supercharged (see 503.4, 503.5 and 503.6) must weigh at least six and one half (6.5) pounds per C.I.D.

503.8 – All two cycle engines must weigh at least six (6) pounds per C.I.D. (.366lbs/cc).

503.9 – 80 C.I.D. (1300 cc) non-turbocharged or non-supercharged must weigh a minimum of 1100 pounds (see 503.1, 503.2 and 503.3).

503.10 – 80 C.I.D. (1300 cc) turbocharged or supercharged must weigh a minimum of 1250 pounds (see 503.4, 503.5 and 503.6).

504. Vehicle Construction

504.1 – Cockpit Design: The cockpit shall be designed so the competitor will be located between the front axle and the rear axle, ± six (6) inches (152.4 mm) and between the wheels.

504.2 – Body: All vehicles competing in this division cannot have body work extend past the outside tire sidewall at its widest point (with wheels pointed straight) front or rear wheels.

504.3 – Airfoils:

504.3.1 – Airfoils shall not extend past the outside tire sidewall at its widest point (with wheels pointed straight) front or rear wheels.

504.3.2 – All airfoils are subject to approval by the Director of Competition.

504.3.3 – Any competitor whose vehicle utilizes alternate materials, i.e., carbon fiber or Kevlar tubes, must contact the Director of Competition for approval prior to Technical Inspection.

504.4 – Roll Cage: (See Section 100 – Car Safety & Construction Technical Regulations and Special Rules)

504.4.1 – It is required that on all vehicles the roll cage extend four inches (4”) (10.16 cm.) above the competitor's helmet.

504.4.2 – All roll cages must be so designed as to permit the lifting of the vehicle in case of an accident.

504.4.3 – A headrest support, firmly attached to the roll cage, shall rest up against the competitor's helmet when the competitor is sitting in the upright position. All headrests must meet the approval of the Director of Competition.

504.4.4 – All vehicles must incorporate the use of two side bars (excluding frame rails) on each side of the vehicle so as not to allow a side opening in the competitor's cockpit larger than 24 inches (609.6 mm). Tubing size will be based upon the weight of the vehicle.

504.4.5 – Revolving Parts: All revolving parts inside the cockpit must be shielded by a suitable guard.

504.4.6 – The roll cage is not considered as a tow point. All Open Wheel vehicles must have a tow ring/hook installed on the back and front of the vehicle, mounted forward of the front wheels and behind the rear wheels.

505. Tires

505.1 – Open Wheel Division: No part of the tires shall be covered from the front edge of the tire tread to the rear edge of the tire tread. For inclement weather purposes only, bolt-on mud deflectors are permitted at the discretion of the Director of Competition, or his/her designee, and must be presented at Technical Inspection.

600 – PIKES PEAK OPEN DIVISION

TECHNICAL REGULATIONS and SPECIAL RULES

Division	Record Eligibility		Purse Eligibility	Award Eligibility
	Overall	Division		
Pikes Peak Open	Yes	Yes	Yes	Yes

The Pikes Peak Open Division is for vehicles which may have started their life as a production vehicle but have been substantially modified. Cars may have large aerodynamic devices, turbos, superchargers, or full drive train swaps. While modifications are more limited than they are in the Unlimited Division, many purpose-built Pikes Peak monsters compete here.

The Director of Competition will have final authority on the eligibility of a vehicle for the Pikes Peak Open Division.

All vehicles must be race-ready and meet safety requirements as outlined in Technical Regulations and Special Rules and must adhere to General Competition Rules.

601. Vehicle Eligibility – It is the intent of these rules that vehicles competing in the Pikes Peak Open Division be based upon a production or approved / recognized aftermarket replica vehicle. Other specialty vehicles may be included at the discretion of the Director of Competition. Innovation and modifications within the rules are encouraged.

601.1 – The vehicle must be based upon a model built by a recognized manufacturer.

601.2 – Exterior body pieces (i.e. all components of the airstream) must be recognizable in appearance to the original item of the production vehicle; this includes bumpers. Bolt-on body pieces may be constructed of an alternate material. The shape, size, location and number of all factory glass openings must remain, however the original window glazing material may be replaced with either identical material or Lexan® or similar material.

601.3 – Only fender flares and spoilers approved in advance by the Director of Competition may be used.

601.4 – Aerodynamic devices and wings are allowed in the Pikes Peak Open Division. Wings that are installed must be no wider than the outside edge of the tires, front or rear, when the tires are pointed straight ahead. The furthest point of any front wing or device cannot extend more than twelve (12”) inches (304.8 mm) from the furthest point on the body on the front of the vehicle. The furthest point of any rear wing or device cannot extend more than twelve (12”) inches (304.8 mm) from the furthest point of the body on the rear of the vehicle. The highest point of any aerodynamic device or wing shall be limited to no more than 18 inches (457.2 mm) above the tallest point of the roof on the vehicle. Any questions regarding aerodynamic devices or wings should be directed to the Director of Competition prior to Technical Inspection.

601.5 – The bottom of the vehicle from center line of the front axle to centerline of the rear axle must remain as produced or be fitted with a flat bottom. Added channels, tunnels, aerodynamic devices and/or skirts are not permitted.

601.6 – Vehicles participating in the Pikes Peak Open Division will be required to weigh in, with the driver, at a location to be determined before the first day of practice. The scales will remain in the same location all week. The minimum weight of the vehicle is to be 1,800 pounds (816.466 kg).

601.7 – Frames, suspensions and brakes are unrestricted.

601.8 – Wheel diameter and width are unrestricted, but the tire must be fully covered by the fender.

700 – EXHIBITION DIVISION

TECHNICAL REGULATIONS and SPECIAL RULES

Division	Record Eligibility			Purse Eligibility	Award Eligibility
	Overall	Division	Previous Class Record (if outlined in the Rule Book)		
Exhibition	Yes	No	*Eligible Non-Division Records	No	No

***Previous Records** - Competitors must declare a record attempt prior to Technical Inspection and meet all competition rules for Eligible Non-Division Records as stated in the Appendix of the 2027 PPIHC Rule Book.

The Exhibition Division is for prototype or pre-production vehicles brought by manufacturers, as well as historic, one of a kind or special interest vehicles. The Exhibition division has historically been used to debut alternative fuel types, or for competitors going after unique record attempts. This division is limited each year and is not purse or award eligible.

The Director of Competition will determine the eligibility of a vehicle for the Exhibition Division. Considerations for acceptance can include:

- Manufacturers and builders entering prototype or pre-production vehicles.
- Historic, one of a kind, special interest vehicles.
- Number of years vehicle has competed in the Exhibition Division.

The Exhibition Division will have limited number of entries.

All vehicles must be race-ready and meet safety requirements as outlined in Technical Regulations and Special Rules and must adhere to General Competition Rules.

700 – Hydrogen Fuel – Hydrogen fuel sources are permitted in Exhibition only.

701.1 – All hydrogen fuel system components (i.e. cylinders/cells, fuel lines, fittings, valves, etc.) must be certified and meet industry standards.

1800 – RECORDS APPENDIX

The appendix is reserved to establish requirements for competitors to contest for eligible non-division records. Any competitor that intends to do so must declare the record attempt to the PPIHC by June 1, 2027

1900 – Production Records (Car (formerly Time Attack #2), SUV/Crossover, and Truck/Van)– TECHNICAL REGULATIONS and SPECIAL RULES

The Director of Competition will have final authority on the eligibility of a vehicle for any Production Records.

This record is for production-based two-wheel and four-wheel drive vehicles that were issued a 17-digit VIN number by the manufacture and have a minimum homologation number of 500. It is the responsibility of the entrant to provide the proper homologation documentation if requested by a race official.

Production Electric vehicles must declare for a Production Electric Record (Car, SUV/Crossover, Truck/Van). Production Hybrid vehicles must declare for a Production Hybrid Record (Car, SUV/Crossover, Truck/Van). They are not eligible for any ICE Vehicle Production Records.

Vehicles equipped with factory installed roll cages are not eligible to compete for any Production Records.

All vehicles must be race ready in order to pass Technical Inspection.

Each vehicle entered in the PPIHC shall be required to pass a safety and technical inspection at a location designated by the Director of Competition. The safety/technical inspection will be conducted under the direction of the PPIHC. Items to be checked are spelled out in these regulations. Vehicles may be subject to inspection by the Director of Competition at any time during the event. Vehicles found to be unsafe will be barred from further competition until defects are corrected.

1901. Vehicle Eligibility – It is the intent of these rules that vehicles competing for any Pikes Peak Production Record be a production vehicle produced by a recognized manufacturer and available to the public. Vehicles must be presented as delivered by the manufacturer when purchased, and factory build sheets (delivery cut, line item, etc.) must be submitted during registration. Eligibility is restricted to closed-bodied four-wheeled vehicles meeting the following requirements:

1901.1 – Coupe, sedan, Crossover, SUV, Wagon, or Truck of no more than five (5) door

1901.2 – Vehicles must have come from the factory as either two-wheel drive (front or rear) or four-wheel drive.

1901.3 – Unibody vehicles only, no tube frame or “body on frame” vehicles allowed.

1901.4 – No added aerodynamics other than OVM.

1901.5 – Bodywork must be OVM as delivered with an OVM part number. All body work must be securely latched or fastened.

1901.6 – Windshield must be OVM as delivered or OVM replacement glass. Door, quarter and rear glass must be OVM as delivered. Door glass may be removed on driver's side only to accommodate roll cage with prior approval. The use of arm restraints or a window net is required if the driver's side door glass is removed.

1901.7 – Vehicles must have working headlights, brake lights and taillights in the OVM location as delivered.

1901.8 – It is required that the vehicle has functioning windshield wipers.

1901.9 – OVM part numbers may be required at the request of the Director of Competition or his designee.

1902. Engine/Transmission –-Engine/Transmission cooling modifications are not allowed.

1902.1 – Engine, transmission and cooling system must be free of leaks; fluid leaks will not be tolerated.

1902.2 – Programming of OVM engine management as delivered is allowed.

1902.3 – Engine, transmission and differentials must remain OVM as delivered.

1903. Chassis/Suspension

1903.1 – Suspension chassis mounting points must be as produced from OVM.

1903.2 – OVM suspension as delivered must remain.

1903.3 – OVM steering column lock as delivered may remain operational.

1903.4 – OVM steering wheels as delivered are allowed.

1904. Electrical System

1904.1 – Master electrical cut-off switch is mandatory and shall be mounted in a location where it can be operated by emergency response personnel (externally) and the driver while belted in the vehicle (internally). Master electrical cut off switch must disable fuel and electrical systems completely.

1904.1.1 – All doors must still be operable once the master electrical power is cut-off. If the vehicle has electric operated/powered doors, there must be a mechanical release both inside the vehicle and outside of the vehicle for the doors to open.

1905. Exhaust System – Unrestricted

1906. Brake System

1906.1 – Brake system must operate all four (4) wheels.

1906.2 – Brake calipers, lines, rotors, and pedals must be in good working order.

1906.3 – Master cylinders and pedal assemblies, calipers and rotors must remain OVM as delivered. Brake pads/linings and fluid are unrestricted.

1906.4 – Wheels must be OVM as delivered.

1907. Interior

1907.1 – All carpet must be removed. All other dash components, gauges, etc. must remain as produced from OVM. All seats may be removed and replaced with a single racing SFI/FIA seat. All trim panels and headliner must remain unless removal is necessary to accommodate safety equipment, which will require prior approval.

1907.2 – To ensure the safety of the Driver and PPIHC Emergency Response Personnel, all airbags must be removed. Entries must be accompanied by information on the process that was used to remove all airbag and SRS systems. Pictures of the removal may be required upon request. Failure to provide this documentation will result in disqualification.

1908. Roll Cages – The Director of Competition has the authority to approve any roll cage system which meets or exceeds the intent of the rules. Any roll cage that does not meet the minimum weight per material specifications defined in the chart shown in 105.2 and/or has a certification that is not recognized by the PPIHC, must be accompanied by documentation during the Request for Invitation process.

1908.1 – Basic Design Considerations: The basic purpose of the roll cage is to protect the driver if the vehicle turns over, runs into an obstacle such as a guardrail or catch fence, or is struck by another vehicle. It shall be designed to withstand compression forces from the weight of the vehicle coming down on the rollover structure and to take fore/aft and lateral loads resulting from the vehicle skidding along on its rollover structure.

1908.2 – A system of head restraint to prevent whiplash and rebound and also to prevent the driver's head from striking the underside of the main hoop shall be installed on all vehicles. Racing seats with integral headrests shall also meet this requirement and

have a support to the main hoop. Seats homologated to, and mounted in accordance with, FIA standard 8855-1999 or higher need not have the seat back attached to the roll structure. The head restraint on non-integral seats shall have a minimum area of thirty-six (36) square inches (23225.8 sq. mm) and be padded with a non-resilient material such as Ethafoam®, Ensolite®, or other similar material with a minimum thickness of one (1”) inch (25.4 mm). Padding meeting SFI spec 45.1 is recommended.

The head restraint shall be capable of withstanding a force of two-hundred (200) lbs. (90.7185 kg.), in a rearward direction. The head restraint support shall be such that it continues rearward or upward from the top edge in a way that the driver's helmet cannot hook over the pad. The padded surface shall touch the helmet; it shall not be under fiberglass or other hard material.

1908.3 – Forward braces and portions of the main hoop subject to contact by the driver's helmet (as seated normally and restrained by seatbelt / shoulder harness) shall be padded with non-resilient material such as Ethafoam® or Ensolite®, or other similar material with a minimum thickness of one-half (1/2”) inch (12.7 mm). Padding meeting SFI spec 45.1 is recommended.

1908.4 – Material: Alloy Steel or DOM - DOM is the preferred material for Roll Cage construction. Contact the Pikes Peak International Hill Climb’s Director of Competition if alloy material will be used.

1908.4.1 – DOM or Alloy Steel

1908.4.1A – Minimum O.D.: 1.5 inches (38.1 mm)

1908.4.1B – Minimum Wall Thickness: 0.095 in. (2.413 mm)

1908.4.2 – Main hoop: 4 bends maximum, totaling 180 degrees ± 10 degrees.

1908.4.3 – Front hoop: 4 bends maximum or front down tubes: 2 bends maximum.

1908.4.4 – Rear hoop supports: No bends.

If any of the above bend requirements cannot be met, all components of the roll cage shall be fabricated from the tubing size(s) listed for the next heavier category of automobiles.

For purposes of determining tubing sizes, the vehicle weight is as raced without fuel and driver. The minus tolerance for wall thickness should not be less than 0.010" (0.254 mm) below the nominal thickness.

An inspection hole at least 3/16 inch (4.7625 mm) diameter, but no greater than 1/4 inch (6.35 mm) diameter may be required in a non-critical area of all tubes with a specified size to facilitate verification of wall thickness.

1908.5 – General Construction

1908.5.1 – One (1) continuous length of tubing shall be used for the main hoop member with smooth continuous bends and no evidence of crimping or wall failure. The radius of bends in the roll cage hoop (measured at centerline of tubing) shall not be less than three (3) times the diameter of the tubing. Whenever possible, the roll cage hoop should start from the floor of the vehicle, and, in the case of tube frame construction, be attached to the chassis tubes by means of gussets or sheet metal webs with support tubes beneath the joints to distribute the loads. It is recommended that gussets be used.

1908.5.2 – Welding shall conform to American Welding Society 01.1:2002, Structural Welding Code, Steel Chapter 10, Tubular Structures. Whenever 01.1 refers to "the Engineer" this shall be interpreted to be the owner of the vehicle. Welds shall be continuous around the entire tubular structure.

1908.5.3 – All welds shall be visually inspected and shall be acceptable if the following conditions are satisfied:

- The weld shall have no cracks.
- Thorough fusion shall exist between weld metal and base metal.
- All craters shall be filled to the cross section of the weld.
- Undercut shall be no more than 0.01 inch (0.254 mm) deep.

1908.5.4 – Aluminum bronze or silicon bronze welding technique is permitted, but extreme care shall be used in preparation of parts before bronze welding and in the design of the attaching joints.

1909. Bolt-In Roll Cage – Full width roll cages are mandatory in all car entries. Roll cages installed in vehicle entries are for driver safety and shall be contained entirely within the driver/passenger compartment.

1909.1 – The cage need not be removable. It shall be bolted and/or welded to the car.

1909.2 – It shall attach to the car in at least six (6) points, consisting of the basic cage with six (6) points and two braces.

1909.3 – The forward part of the cage shall be mounted to the floor of the vehicle.

1909.4 – Removable roll cages and braces shall be very carefully designed and constructed to be at least as strong as a permanent installation. If one tube fits inside another tube to facilitate removal, the removable portion shall fit tightly and shall bottom by design and at least two (2) bolts shall be used to secure each such joint. The telescope section shall be at least eight (8”) inches (203.2 mm) in length.
Minimum bolt diameter is 3/8 inches (9.525 mm).

1910. Main Roll Hoop – Main roll hoop (behind the driver) shall extend the full width of the driver/passenger compartment and shall be as near the roof as possible. It shall incorporate a diagonal lateral brace to prevent lateral distortion of the hoop. Any number of additional reinforcing bars is permitted within the structure of the cage. It is required that the horizontal brace behind the driver's seat continue from the diagonal to the passenger side main hoop upright or that a second diagonal be installed in the main hoop.

1911. Front Roll Hoops

1911.1 – The front or side hoops shall follow the line of the front pillars to the top of the windshield (as close to the roof as possible) then horizontally to the rear, attaching to the main hoop. These two side hoops are to be connected together by a tube over the top of the windshield.

1911.2 – A front hoop following the line of the front pillars and connected by horizontal bars to the main hoop on each side at the top may be used, or a top "halo" hoop following the roof line from the main hoop to the windshield with forward down tubes following the line of the front pillars to the floor.

1911.3 – The front or side hoops may extend through the dash pad. This includes the forward part of the door panel if it is an extension of the dash panel.

1911.4 – One (1) bar is recommended in a horizontal plane between forward cage braces in the dash area.

1912. Bracing – The main roll hoop shall have two braces extending to the rear attaching to the frame or chassis. Braces shall be attached as near as possible to the top of the main hoop not more than six (6”) inches (152.4 mm) below the top and at an included angle of at least thirty (30) degrees. On cars where the rear window/bulkhead prohibits the installation of rear braces (e.g., Honda del Sol), the main hoop shall be attached to the body by plates welded to the cage and bolted to the stock shoulder harness mounting points.

1913. Side Protection – Two side tubes connecting the front and rear hoops across the driver's door opening are mandatory and one across the passenger's door opening is mandatory excluding and in addition to the rocker box. The telescope sections should be at least four (4”) inches (101.6 mm) in length. Minimum bolt diameter is 3/8 inches. The driver's window safety net may be mounted to this side tube and the top cage tube. Driver's door side tubes may extend into the door. The door bars may run parallel, or in the shape of an “X” If the two door bars do not intersect as they do when forming an “X”, a minimum of two vertical tube sections shall connect the upper and lower door bars. NASCAR-style side protection is permitted.

The driver's door, window operating mechanism, inner door trim panel, armrest, map pockets, and inside door latch/lock operating mechanism may be removed and the inner door structural panel may be modified, but not removed, to facilitate this type of side protection. The stock outside door latch/lock operating mechanism shall not be removed or modified. Cars without OVM side impact beams must have two (2) driver's side tubes in X position or NASCAR-style protection.

1914. Mounting Plates

1914.1 – Each mounting plate shall be at least .080” (2.032 mm) thick if welded and 3/16" (4.7625 mm) thick (with appropriate backing plates) if bolted. There shall be a minimum of three (3) bolts per mounting plate if bolted.

1914.2 – Each mounting plate shall not be greater than 100 square inches and shall be no greater than twelve (12”) inches (304.8 mm) or less than two (2”) inches (50.8 mm) on a side.

1914.3 – Whenever possible, mounting plates shall extend onto a vertical section of the structure (such as a rocker box).

1914.4 – The mounting plate may be multi-angled but must not exceed these dimensions in a flat plane.

1914.5 – Any number of tubes may attach to the plate or each other.

1914.6 – The thickness of mounting plates bolted to the structure of the car shall not be less than the thickness of the roll hoop or brace that they attach and shall be backed-up with a plate of equal dimensions on the opposite side of the panel, with the plates through-bolted together. A minimum of three (3) bolts per mounting plate is required for bolted mounting plates. All hardware (bolts) shall be Grade 5 or better with 5/16" (7.9375 mm) diameter minimum. Mounting plates welded to the structure of the car shall not be less than .080" (2.032 mm) thick. Whenever possible the mounting plates should extend onto a vertical section of the structure (such as door pillar).

1915. Hardware (Bolts) – All hardware shall be Grade 5 or better – 3/8" minimum diameter.

1916. Tires – All vehicles competing for a Production Record must utilize a DOT certified tire.

2000 – ELECTRIC MODIFIED RECORDS (Car, SUV/Crossover, Truck/Van and Prototype) – TECHNICAL REGULATIONS & SPECIAL RULES

2001 – Batteries

2001.1 Battery System – Batteries must be fully contained in enclosures that can be sealed by PPIHC Officials. Enclosures must be equipped with a forced ventilation system rated at least 10cfm. It must operate whenever the battery system is electrically connected to the car. All electric cables must be properly sized to expected system currents. All electric vehicle entries must be accompanied by the MSDS information on all batteries that are considered hazardous or toxic. Failure to provide proper documentation will result in disqualification.

2001.2 Battery Disconnect – The battery system will be equipped with a manually operated, high-current switch to quickly disconnect the battery from the electrical system. This switch must be capable of interrupting the full load current. The switch must physically be located as near to the battery as practical and be operable from both the driver compartment and from outside the car. This switch must be clearly marked in day glow orange letters as the "Battery Switch" and be plainly marked with "ON" and "OFF" positions.

2001.3 Main Fuse – A separate fuse (not a circuit breaker) will be placed in series with the main battery and the rating will not exceed 200% of the maximum expected current draw. All low voltage taps from the main battery will be separately fused. All fuses must be placed first in series with the battery starting at the positive connection.

2001.4 Electrical Shock Hazards – All exposed conductors operating at greater than thirty-six (36) volts must be properly insulated and marked with "High Voltage" warning signs.

2001.5 Covers and Shields – All revolving parts must be suitably covered to prevent accidental contact or injury should one or more of these parts break or malfunction. All steering linkage must be shielded from contact with the driver. If a flywheel is used it must be covered with an NHRA Approved Scatter Shield.

2001.6 – Hybrid vehicles are prohibited. Entries must be 100% electric powered.

2002 Roll Cage – All vehicles must incorporate the use of a roll cage (See Safety & Construction Technical Regulations Section 100).

2003 Safety – Vehicle and driver must adhere to safety regulations spelled out in the "Safety Section" of the 2027 Rule Book. Any electric powered vehicle must be fitted with an audio WARNING system that produces a **CONSTANT** audio warning at a minimum of 120 decibels being measured from three feet from the vehicle. Audio warning systems must only be able to be activated from outside the vehicle. **NO EXCEPTIONS**.

3000 – ELECTRIC PRODUCTION RECORDS – Car, SUV/Crossover, Truck/Van) TECHNICAL REGULATIONS & SPECIAL RULES

All vehicles declaring for an Electric Production Record must follow rules in section 1900 on pages 79-85 for vehicle eligibility requirements.

It is the intent of these rules that vehicles competing for the Electric Production record be a production vehicle readily available to the public and produced by a recognized manufacturer.

In the event of a protest, the owner of the protested vehicle shall bear all responsibility to present documentation of the production vehicle.

No additional aerodynamics are allowed. Vehicle must run on DOT certified tires

3001 – Batteries

3001.1 Battery System – Batteries must be fully contained in enclosures that can be sealed by PPIHC Officials. Enclosures must be equipped with a forced ventilation system rated at least 10cfm. It must operate whenever the battery system is electrically connected to the car. All electric cables must be properly sized to expected system currents. All electric vehicle entries must be accompanied by the MSDS information on all batteries that are considered hazardous or toxic. Failure to provide proper documentation will result in disqualification.

3001.2 Battery Disconnect – The battery system will be equipped with a manually operated, high-current switch to quickly disconnect the battery from the electrical system. This switch must be capable of interrupting the full load current. The switch must physically be located as near to the battery as practical and be operable from both the driver compartment and from outside the car. This switch must be clearly marked in day glow orange letters as the "Battery Switch" and be plainly marked with "ON" and "OFF" positions.

3001.3 Main Fuse – A separate fuse (not a circuit breaker) will be placed in series with the main battery and the rating will not exceed 200% of the maximum expected current draw. All low voltage taps from the main battery will be separately fused. All fuses must be placed first in series with the battery starting at the positive connection.

3001.4 Electrical Shock Hazards – All exposed conductors operating at greater than thirty-six (36) volts must be properly insulated and marked with "High Voltage" warning signs.

3001.5 Covers and Shields – All revolving parts must be suitably covered to prevent accidental contact or injury should one or more of these parts break or malfunction. All steering linkage must be shielded from contact with the driver. If a flywheel is used it must be covered with an NHRA Approved Scatter Shield.

3001.6 – Hybrid vehicles are prohibited. Entries must be 100% electric powered.

3002 Roll Cage – All cars must incorporate the use of a roll cage (See Safety & Construction Technical Regulations Section and Production Records (1900)).

3003 Safety – In addition to those areas addressed in the Electric Division's "Technical Regulations and Special Rules" each car and driver must adhere to safety regulations spelled out in the "Safety Section" of the 2027 Rule Book. Any electric powered vehicle must be fitted with an audio WARNING system that produces a **CONSTANT** audio warning at a minimum of 120 decibels being measured from three feet from the vehicle. Audio warning systems must only be able to be activated from outside the vehicle. **NO EXCEPTIONS**.

3004 Brakes – Brake/Rotor components are not required to be OVM but must work in conjunction with wheels that are OVM.

3005 Interior –

> 3005.1 – All carpet must be removed. All other dash components, gauges, etc. must remain as produced from OVM as delivered. All seats may be removed and replaced with a single racing SFI/FIA seat.
>
> 3005.2 – To ensure the safety of the Driver and PPIHC Emergency Response personnel, all airbags must be removed or disabled. Entries must be accompanied by information of the process that was used to disable all airbag and SRS systems. Pictures of the disabling may be required upon request. Failure to provide this documentation will result in disqualification.

4000 – HYBRID MODIFIED RECORDS (Car, SUV/Crossover, Truck/Van and Prototype) – TECHNICAL REGULATIONS & SPECIAL RULES

4001 – Batteries

4001.1 Battery System – Batteries must be fully contained in enclosures that can be sealed by PPIHC Officials. Enclosures must be equipped with a forced ventilation system rated at least 10cfm. It must operate whenever the battery system is electrically connected to the car. All electric cables must be properly sized to expected system currents. All electric vehicle entries must be accompanied by the MSDS information on all batteries that are considered hazardous or toxic. Failure to provide proper documentation will result in disqualification.

4001.2 Battery Disconnect – The battery system will be equipped with a manually operated, high-current switch to quickly disconnect the battery from the electrical system. This switch must be capable of interrupting the full load current. The switch must physically be located as near to the battery as practical and be operable from both the driver compartment and from outside the car. This switch must be clearly marked in day glow orange letters as the "Battery Switch" and be plainly marked with "ON" and "OFF" positions.

4001.3 Main Fuse – A separate fuse (not a circuit breaker) will be placed in series with the main battery and the rating will not exceed 200% of the maximum expected current draw. All low voltage taps from the main battery will be separately fused. All fuses must be placed first in series with the battery starting at the positive connection.

4001.4 Electrical Shock Hazards – All exposed conductors operating at greater than thirty-six (36) volts must be properly insulated and marked with "High Voltage" warning signs.

4001.5 Covers and Shields – All revolving parts must be suitably covered to prevent accidental contact or injury should one or more of these parts break or malfunction. All steering linkage must be shielded from contact with the driver. If a flywheel is used it must be covered with an NHRA Approved Scatter Shield.

4002 Roll Cage – All vehicles must incorporate the use of a roll cage (See Safety & Construction Technical Regulations Section 100).

4003 Safety – Vehicle and driver must adhere to safety regulations spelled out in the "Safety Section" of the 2027 Rule Book.

5000 – HYBRID PRODUCTION RECORDS – (Car, SUV/Crossover, Truck/Van) TECHNICAL REGULATIONS & SPECIAL RULES

All vehicles declaring for a Hybrid Production Record must follow rules in section 1900 on pages 79-85 for vehicle eligibility requirements.

It is the intent of these rules that vehicles competing for the Hybrid Production record be a production vehicle readily available to the public and produced by a recognized manufacturer.

In the event of a protest, the owner of the protested vehicle shall bear all responsibility to present documentation of the production vehicle.

No additional aerodynamics are allowed. Vehicle must run on DOT certified tires

5001 – Batteries

5001.1 Battery System – Batteries must be fully contained in enclosures that can be sealed by PPIHC Officials. Enclosures must be equipped with a forced ventilation system rated at least 10cfm. It must operate whenever the battery system is electrically connected to the car. All electric cables must be properly sized to expected system currents. All electric vehicle entries must be accompanied by the MSDS information on all batteries that are considered hazardous or toxic. Failure to provide proper documentation will result in disqualification.

5001.2 Battery Disconnect – The battery system will be equipped with a manually operated, high-current switch to quickly disconnect the battery from the electrical system. This switch must be capable of interrupting the full load current. The switch must physically be located as near to the battery as practical and be operable from both the driver compartment and from outside the car. This switch must be clearly marked in day glow orange letters as the "Battery Switch" and be plainly marked with "ON" and "OFF" positions.

5001.3 Main Fuse – A separate fuse (not a circuit breaker) will be placed in series with the main battery and the rating will not exceed 200% of the maximum expected current draw. All low voltage taps from the main battery will be separately fused. All fuses must be placed first in series with the battery starting at the positive connection.

5001.4 Electrical Shock Hazards – All exposed conductors operating at greater than thirty-six (36) volts must be properly insulated and marked with "High Voltage" warning signs.

5001.5 Covers and Shields – All revolving parts must be suitably covered to prevent accidental contact or injury should one or more of these parts break or malfunction. All steering linkage must be shielded from contact with the driver. If a flywheel is used it must be covered with an NHRA Approved Scatter Shield.

5002 Roll Cage – All cars must incorporate the use of a roll cage (See Safety & Construction Technical Regulations Section and Production Records (1900)).).

5003 Safety – In addition to those areas addressed in the Electric Division's "Technical Regulations and Special Rules" each car and driver must adhere to safety regulations spelled out in the "Safety Section" of the 2027 Rule Book.

5004 Brakes – Brake/Rotor components are not required to be OVM but must work in conjunction with wheels that are OVM.

5005 Interior –

> 5005.1 – All carpet must be removed. All other dash components, gauges, etc. must remain as produced from OVM as delivered. All seats may be removed and replaced with a single racing SFI/FIA seat.
>
> 5005.2 – To ensure the safety of the Driver and PPIHC Emergency Response personnel, all airbags must be removed or disabled. Entries must be accompanied by information of the process that was used to disable all airbag and SRS systems. Pictures of the disabling may be required upon request. Failure to provide this documentation will result in disqualification.

DEFINITION OF TERMS:

Active Aero – Any adjustable or moveable aero surface while vehicle is in motion. (Ex. Electric, air, hydraulic, cable)

Appeals Committee – Members selected from the Board of Directors by the Chairman of the Pikes Peak Auto Hill Climb Educational Museum, Inc.

Board of Directors – The Board of Directors of the PPAHCEM.

Body on Frame - Uses a separate ladder frame for strength, and the body is a non-structural component bolted on top.

Bulletins – Competitor updates and notices.

CC – Cubic Centimeters

CFM – Cubic Feet per Minute

CID – Cubic Inch Displacement, the sum of the volumetric displacement of an internal combustion engine.

Chair – Chairman of the Board of Directors of the PPAHCEM.

Class – A category within a Division.

Competition – Any test, race, practice period, qualification attempt or event of one or more automobiles or automotive products governed by these Rules.

Competitor – The driver of a race vehicle.

Course – That portion of the Pikes Peak Highway and the surrounding areas designated by the PPAHCEM for any portion of any event.

Credential – A permit to participate in competition.

Data Acquisition – Data and/or Video that is recorded and stored on-board the vehicle and is not transmitted wirelessly at any time.

Disqualification – Denial of permission to take part in any competition and the voiding of all results of previous competition.

Division – The foundation of the competition structure, wherein various entries and vehicle types are separated by established rules and specifications.

DNF – Did Not Finish

DOM – Drawn Over Mandrel

DOT – Department of Transportation

Driver – The operator of a race vehicle in a competition.

Entrant – The individual or individuals, firm, corporation or other business association entering a race vehicle for competition and signing the required entry form. The entrant must include the owner of the automobile.

Entry Fee – A fee to accompany the completed and signed entry form.

EPA – Environmental Protection Agency

Event – All PPAHCEM organized functions at locations designated by PPAHCEM in connection with the annual race on the Pikes Peak Highway.

FIA – Federation Internationale de l'Automobile (International Automobile Federation)

Gurney flap – (aka wicker bill) A small tab projecting from the trailing edge of a wing. Typically it is set at a right angle to the pressure-side surface of a wing (airfoil).

Hybrid – A vehicle powered by a combination of an internal combustion engine and one or more electric motors.

Monocoque – A vehicle that gets its strength from the entire external shell.

Multi-element wing – A wing that consists of multiple airfoils placed in close proximity to each other in order to maintain air attachment with the goal of achieving greater pressure differential between the top and bottom surfaces.

MSDS/SDS – Material Safety Data Sheets/ Safety Data Sheets.

NHRA – National Hot Rod Association.

OVM – Original Vehicle Manufacturer aka OEM.

Participant – One who participates in a sanctioned event in any way (driver, crew, owner, official, volunteer).

Penalty – Any condition imposed on a participant for violation of these rules. To penalize is to impose a penalty.

PPAHCEM – Pikes Peak Auto Hill Climb Educational Museum. Inc.

PPIHC – Pikes Peak International Hill Climb.

Qualification – Conducted to determine the competitors Race Day run order.

Race – A competition in which elapsed time is the determining factor.

Race Official – See definition of Stewards.

Race Vehicle – Any vehicle entered in any competition (i.e. car).

Rookie – An entrant who has not crossed the Start Line timing loop on Race Day at the Pikes Peak International Hill Climb; or a veteran competitor who has competed in a prior Motorcycle/Car Division and in a future year changes to the opposite (either Car or Motorcycle) division for the first time.

Rules – The Official General Competition Technical Regulations and Special Rules.

SAE – Society of Automotive Engineers

Selection Committee – Members appointed by the Chairman of the PPAHCEM to review submitted applications and issue invitations.

Single-element wing – See definition for "wing"

SFI – The SFI Foundation, a non-profit organization established to issue and administer standards for the quality of specialty performance and racing equipment.

Splitter – A single aerodynamic component mounted on the front underside of a vehicle. Similar to a wing, a splitter creates a low-pressure area at its lower surface. Unlike a wing, it is attached to the vehicle's body and the vehicle's body is the surface that generates the differentiating high pressure.

Spoiler – A part of a vehicle's body that is designed to disrupt airflow over or under the car's body, often reducing drag and lift. A spoiler attaches to the body.

SRS – Supplemental Restraint System/ Secondary Restraint System, as it relates to automotive airbags.

Stewards – The officials (Race Officials) appointed by PPAHCEM and PPIHC.

Technical Inspection – Conducted by the Director of Competition, each vehicle is inspected for compliance with safety and technical requirements.

Telemetry – The live transmission of Data and/or Video from the car to a remote location.

Tunnel - a channel on the underside of a vehicle with an opening, throat, and exit that, combined with the ground, uses the venturi effect to create downforce.

UL – Underwriters Laboratories Inc., a world leader in product safety testing and certification.

Unibody - Combines the body, floor pan, and chassis into a single structure.

Violation – Failure to act in accordance with the PPIHC rules and regulations.

Vehicle Plane: Definitions

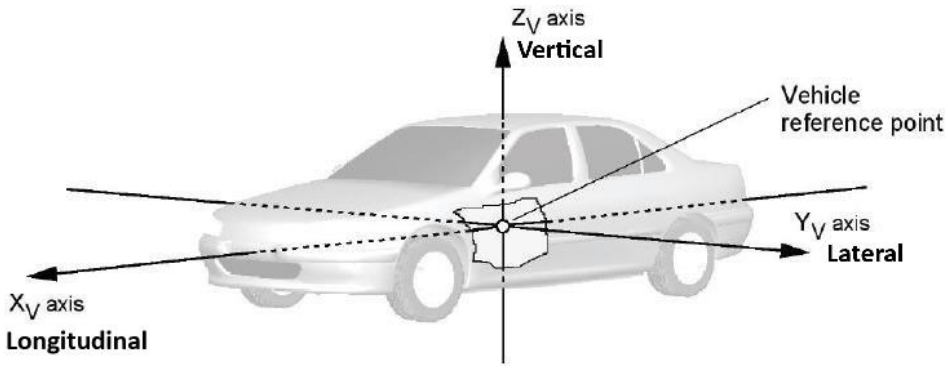

Wing – A single airfoil designed to generate downforce by creating a pressure differential using the airflow over and under the wing. A wing stands off the body.

DIAGRAM A (Subject to Change):

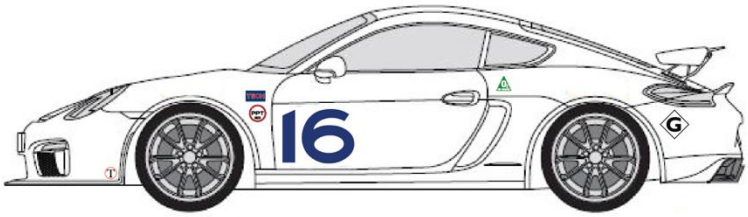

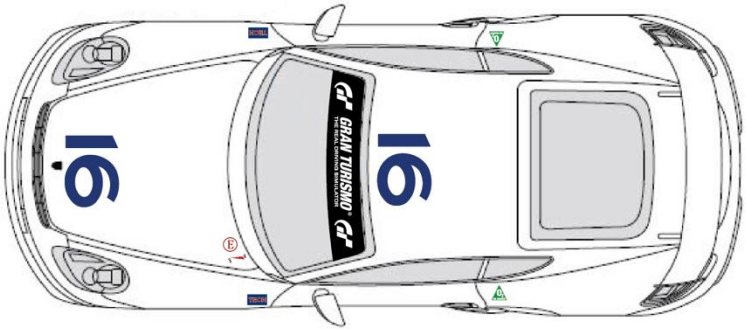

Gran Turismo Windshield Banner GRAN TURISMO® THE REAL DRIVING SIMULATOR Display centered on the top of the windshield / visor (no other commercial decals permitted). See section 13.3.1 of the Rule Book.	*Vehicle Number Decal* 16 Display on: 1. Both sides of the vehicle 2. Hood or Roof (or Nose as applicable) Minimum of 12 inches (30.48 cm) tall. Color must contrast with background.	*PPIHC Technical Inspection Decal* TECH 6x3.25in Display on both sides of vehicle behind front wheel.
PPIHC Division Decal GT4 GT4 EX OW PPO TAI U U 4in Display on both sides of vehicle behind front wheel.	*Master Electrical Shut-Off Decal* Display near master electrical shut-off switch. ON OFF 1x2in *Fire Suppression Decal* Display near fire suppression system. 3.25in E	*Tow Hook Decal* TOW 3.25in Display near rear and front tow hooks.
Oxygen On-board Decal O_2 ON BOARD 5.3x5.3in Display on both sides of vehicle on door or near driver (as applicable).	*Fuel Type Decal* D E G H HEV M 8x8in Display on both sides of vehicle near fuel cell.	*Transponder Decal* T 3.25in Display near desired transponder location on vehicle.

DIAGRAM B:

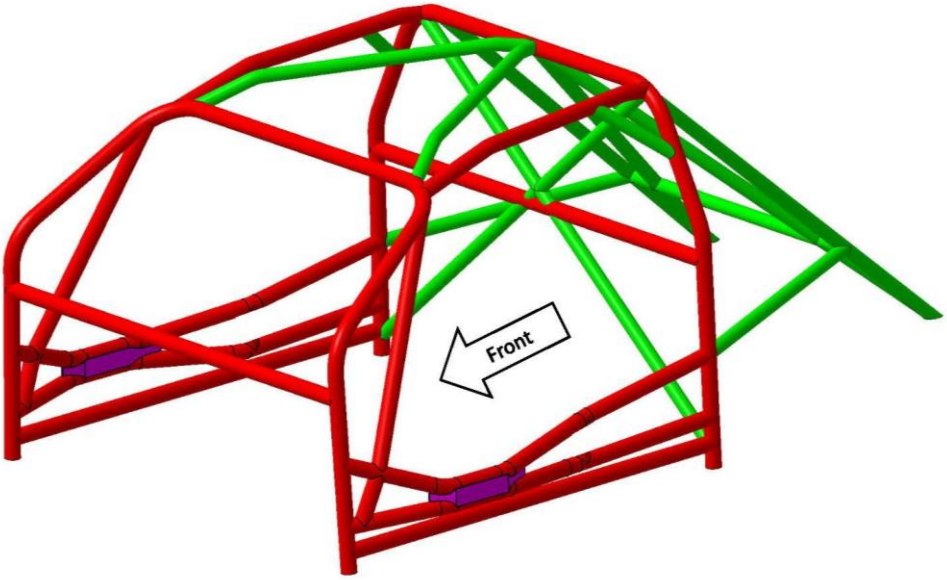

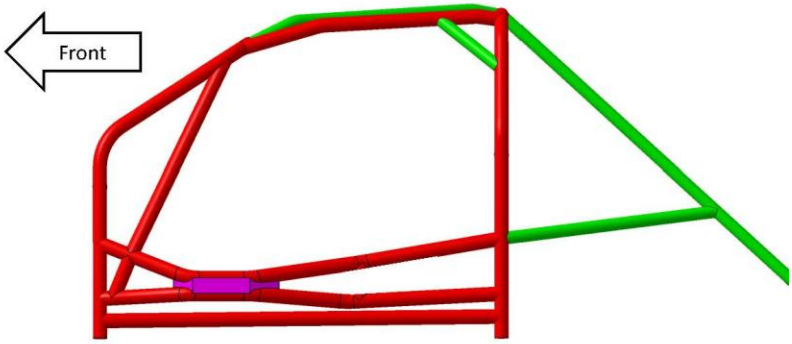

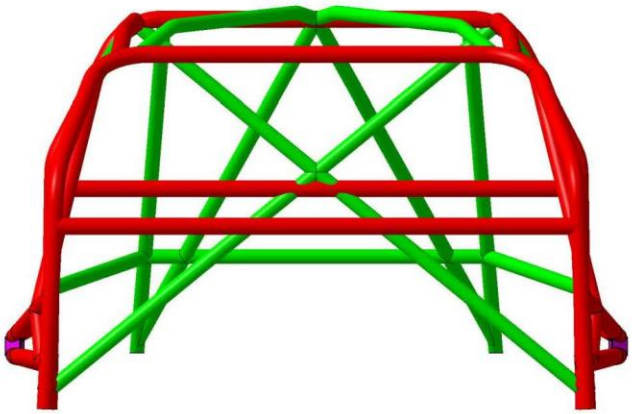

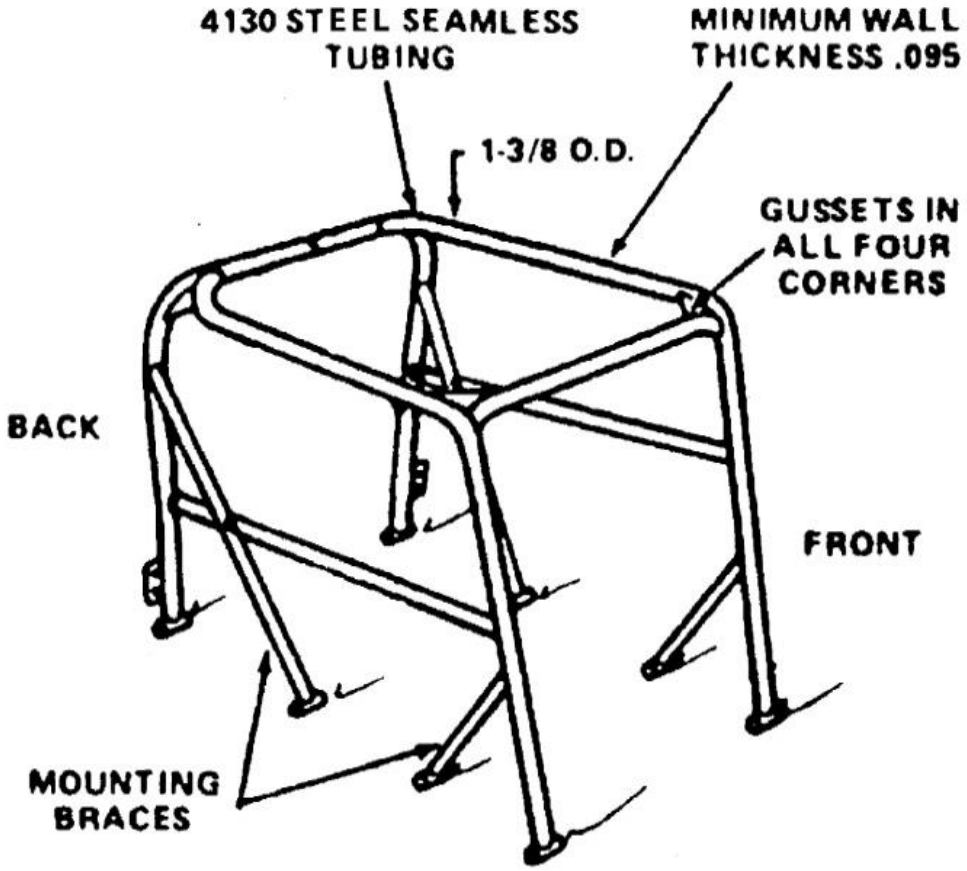

Roll cage must be welded to frame.

FRONT ENGINE
OPEN WHEEL

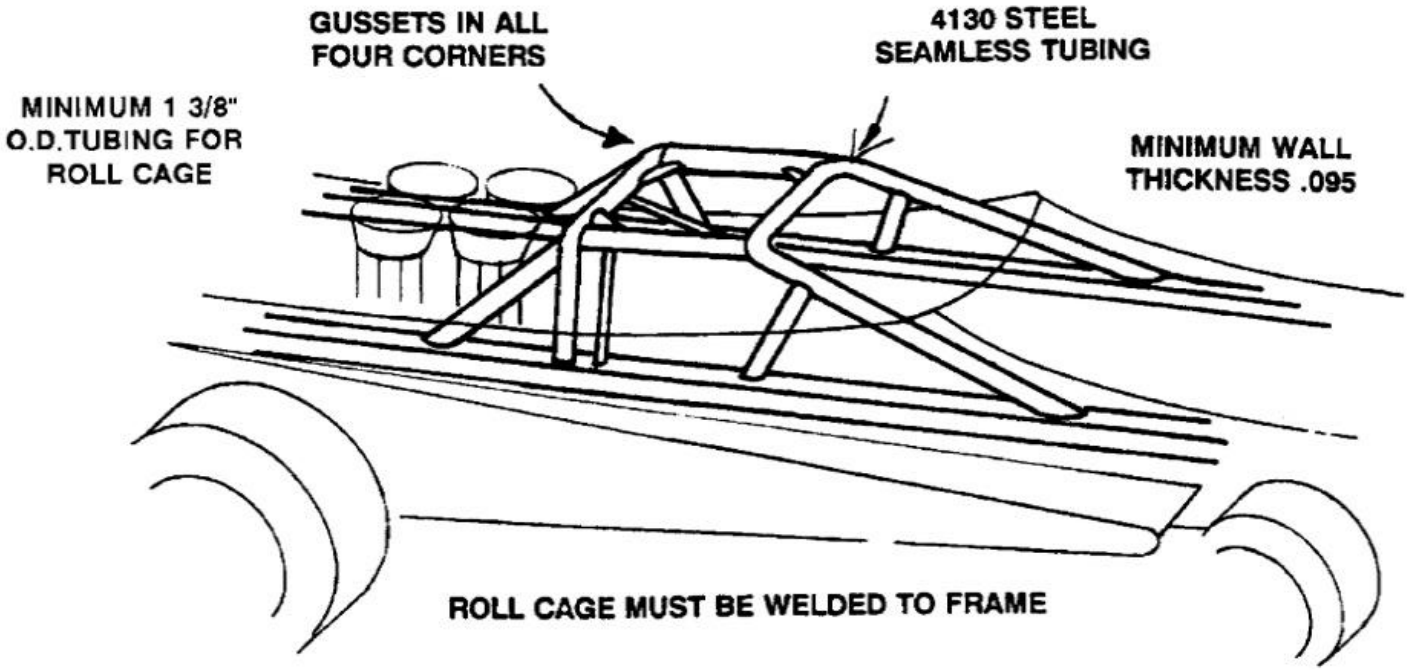
GUSSETS IN ALL
FOUR CORNERS
4130 STEEL
SEAMLESS TUBING
MINIMUM 1 3/8"
O.D.TUBING FOR
ROLL CAGE
MINIMUM WALL
THICKNESS .095
ROLL CAGE MUST BE WELDED TO FRAME

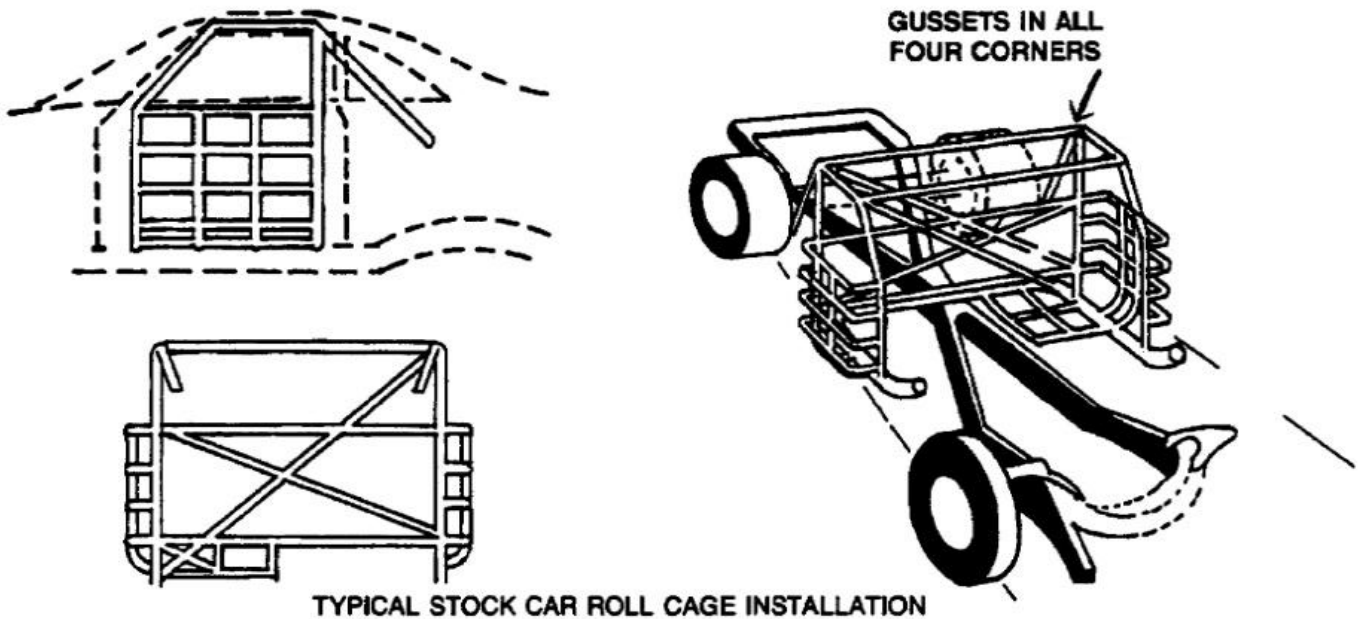

TYPICAL STOCK CAR ROLL CAGE INSTALLATION
Note: Gussets recommended at all welds

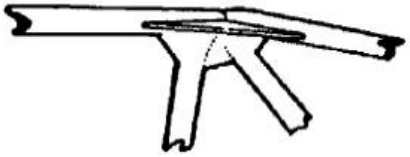

CORNER OF
MAIN HOOP
INTERSECTION

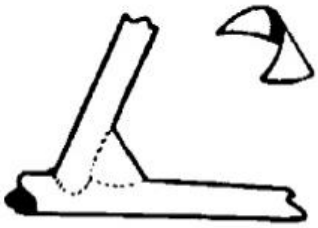

FRONT LOWER HOOP
INTERSECTION

CAPPING PLATE

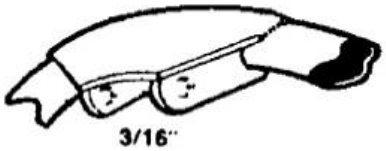

3/16"

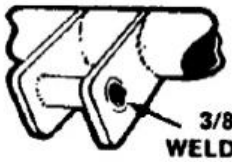

3/8" I.D. TUBING TO BE
WELDED INTO END OF STAY

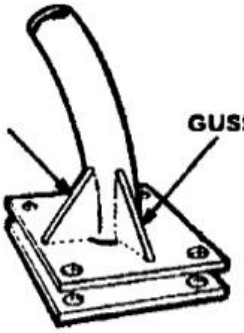

BRACING PLATE TO BE
FASTENED WITH 3/8" GRADES
BOLT OR BETTER

Diagram C:

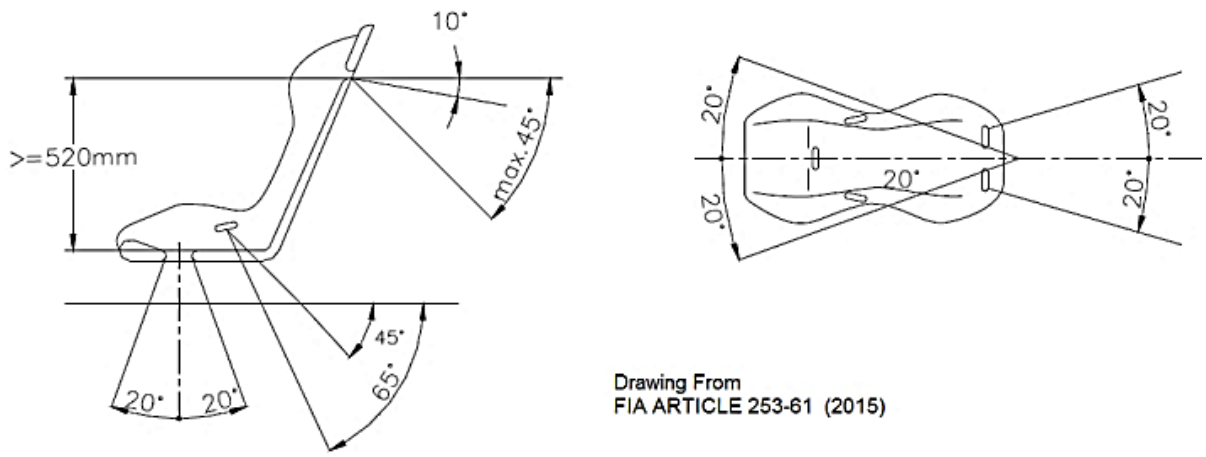

CONVERSION TABLES:

Inches to Millimeters Conversion Table:

INCHES (in.)	MILLIMETERS (mm)
1/16	1.5875
1/8	3.1750
3/16	4.7625
1/4	6.3500
5/16	7.9375
3/8	9.5250
7/16	11.1125
1/2	12.7000
9/16	14.2875
5/8	15.8750
11/16	17.4625
3/4	19.0500
13/16	20.6375
7/8	22.2250
15/16	23.8125
1"	25.4001

US Gallons to Liters Conversion Table:

US Gallons (gal.)	Liters (L.)
0.264172052	1
0.528344104	2
0.792516156	3
1.056688208	4
1.32086026	5
1.585032312	6
1.849204364	7
2.113376416	8
2.377548468	9
2.64172052	10
2.905892572	11
3.170064624	12
3.434236676	13
3.698408728	14
3.96258078	15
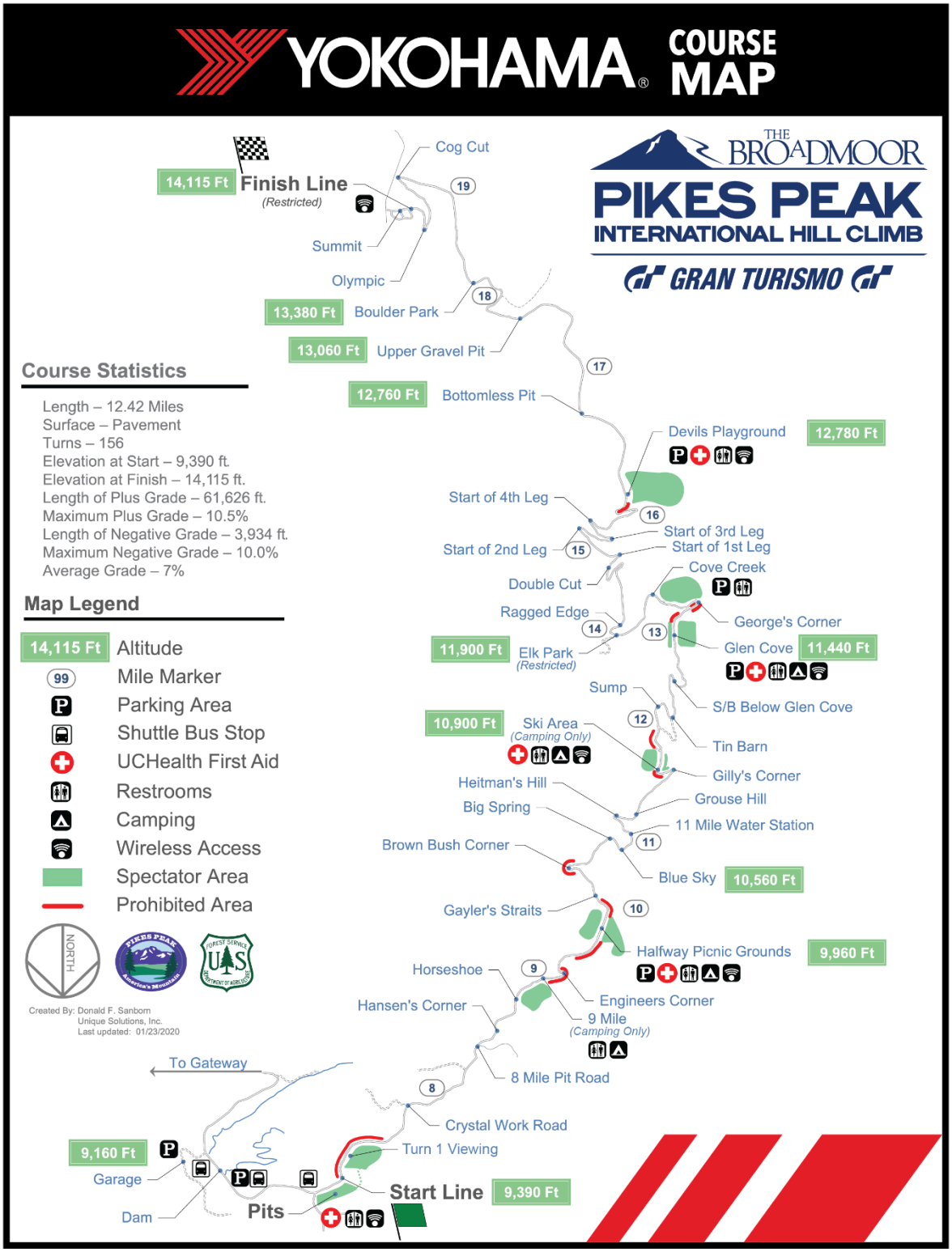
YOKOHAMA COURSE MAP: